chanhvinh.com

SIEMENS

Data sheet 3NB1020-1KK10



SITOR fuse size 0 50A aR 600V dc/900V VSI 750V dc UL @MBC 4xIn blade contacts

Model	
product brand name	SENTRON
product designation	SITOR fuse link
design of the product	with blade contacts without slots
design of an identification indicator	with front indicator
design of the fuse link	SITOR, LV HRC design
General technical data	
size of fuse system according to EN 60269-1	NH0
operating class of the fuse link	aR
type of voltage of the operating voltage	DC
Supply voltage	
supply voltage	
● at DC	600 V
Breaking Capacity	
switching capacity current	
● at DC according to IEC 60947-2 rated value	100 kA
● according to IEC 60947-2 rated value	100 kA
Dissipation	
power loss [W]	16 W
power loss [W]	
● for rated value of the current at AC in hot operating state per pole	16 W
● maximum	16 W
Product details	
product description	with blade contacts, silver-plated
accessories included	no
Mechanical Design	
mounting position	Any, preferably vertical
net weight	275 g
Environmental conditions	
ambient temperature during operation	
● minimum	-20 °C
● maximum	50 °C
environmental category	-20 to +50 at 95% relative humidity
Approvals Certificates	

General Product Approval	**other**	**Environment**

Subject to change without notice
© Copyright Siemens

chanhvinh.com

Miscellaneous Confirmation

Environment

Environmental Confirmations

Further information

Information on the packaging
https://support.industry.siemens.com/cs/ww/en/view/109813875
Information- and Downloadcenter (Catalogs, Brochures,…)
http://www.siemens.com/lowvoltage/catalogs
Industry Mall (Online ordering system)
https://mall.industry.siemens.com/mall/en/en/Catalog/product?mlfb=3NB1020-1KK10
Service&Support (Manuals, Certificates, Characteristics, FAQs,...)
https://support.industry.siemens.com/cs/ww/en/ps/3NB1020-1KK10
Image database (product images, 2D dimension drawings, 3D models, device circuit diagrams, ...)
http://www.automation.siemens.com/bilddb/cax_en.aspx?mlfb=3NB1020-1KK10
CAx-Online-Generator
http://www.siemens.com/cax
Tender specifications
http://www.siemens.com/specifications

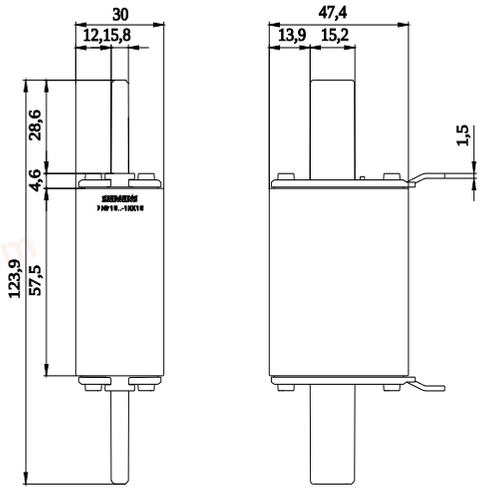

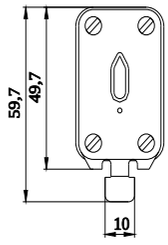

last modified: 4/4/2025

Subject to change without notice
© Copyright Siemens

chanhvinh.com

chanhvinh.com
chanhvinh.com
chanhvinh.com
chanhvinh.com
chanhvinh.com
chanhvinh.com

Subject to change without notice
© Copyright Siemens