chanhvinh.com

SIEMENS

Data sheet for SIMOTICS S-1FK2

Article No. : **1FK2104-5AK10-2SA0**



Figure similar

Client order no. :
Order no. :
Offer no. :
Remarks :

Item no. :
Consignment no. :
Project :

Basic motor data	
Motor type	Permanent-magnet synchronous motor, Natural cooling, IP64
Motor type	High Dynamic
Static torque	2.40 Nm
Static current	4.4 A
Maximum torque	7.60 Nm
Maximum current	16.0 A
Maximum speed	8,000 rpm
Rotor moment of inertia	0.6500 kgcm²
Weight	3.7 kg

Rated data	
SINAMICS S210, 3AC 400V	
Rated speed	6,000 rpm
Rated torque	1.70 Nm
Rated current	3.2 A
Rated power	1.07 kW

Encoder system	
Encoder system	Encoder AS22DQC: Absolute encoder single turn 22 bit

Motor connection	
Connection type	OCC for S210
Connector size	M17

Mechanical data	
Design acc. to Code I	IM B5 (IM V1, IM V3)
Vibration severity grade	Grade A
Shaft height	40
Flange size (AB)	80 mm
Centering ring (N)	70 mm
Hole circle (M)	90 mm
Screw-on hole (S)	6.5 mm
Overall length (LB)	170 mm
Diameter of shaft (D)	14 mm
Length of shaft (E)	30 mm
Length of flange diagonal (P)	105 mm
Shaft end	Plain shaft
Color of the housing	Standard (Anthracite, similar to RAL 7016)

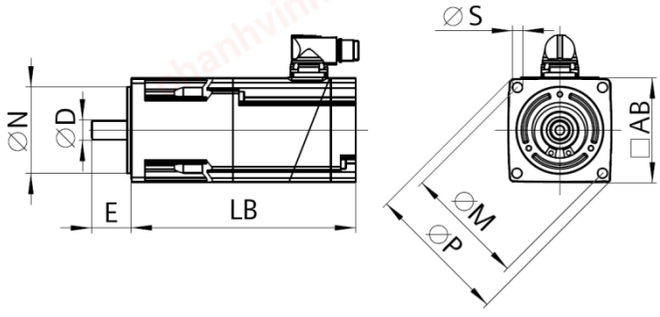

Holding brake	
Holding torque	3.30 Nm
Average dynamic torque	3.30 Nm
Opening time	50 ms
Closing time	40 ms
Maximum single switching energy [1)]	270 J
Service life, operating energy	120,000 J
Holding current[2)]	0.2 A
Break-induced current for 500 ms[2)]	1.2 A

[1)] Up to three consecutive emergency stops and up to 25% of all emergency stops as a Wmax high energy stop possible.

[2)] Typcial value for 20°C ambient temperature. At -15°C the break-induced currents can be increased by up to 30%.