chanhvinh.com

Product data sheet



WTB8-P1131S06

W8

MINIATURE PHOTOELECTRIC SENSORS

SICK
Sensor Intelligence.

chanhvinh.com

WTB8-P1131S06 | W8

MINIATURE PHOTOELECTRIC SENSORS



Illustration may differ

Ordering information

Type	Part no.
WTB8-P1131S06	6038620

Included in delivery: BEF-W100-A (1)

Other models and accessories ➜ www.sick.com/W8

Detailed technical data

Features

Functional principle	Photoelectric proximity sensor
Functional principle detail	Background suppression
Dimensions (W x H x D)	11 mm x 31 mm x 20 mm
Housing design (light emission)	Rectangular
Sensing range max.	40 mm ... 300 mm [1]
Sensing range	30 mm ... 300 mm [1]
Type of light	Visible red light
Light source	LED [2]
Light spot size (distance)	Ø 20 mm (300 mm)
Wave length	650 nm
Adjustment	Potentiometer, 4 turns

[1] Object with 90% remission (based on standard white, DIN 5033).

[2] Average service life: 100,000 h at T_U = +25 °C.

Mechanics/electronics

Supply voltage U_B	10 V DC ... 30 V DC [1]
Ripple	± 10 % [2]

[1] Limit values when operated in short-circuit protected network: max. 8 A.

[2] May not exceed or fall below U_V tolerances.

[3] Without load.

[4] Signal transit time with resistive load.

[5] With light/dark ratio 1:1.

[6] Do not bend below 0 °C.

[7] A = V_S connections reverse-polarity protected.

[8] B = inputs and output reverse-polarity protected.

[9] D = outputs overcurrent and short-circuit protected.

chanhvinh.com

Current consumption	30 mA [3]
Switching output	PNP
Switching mode	Light/dark switching
Switching mode selector	Selectable via light/dark rotary switch
Signal voltage PNP HIGH/LOW	Approx. V_S – 1.8 V / 0 V
Output current $I_{max.}$	≤ 100 mA
Response time	≤ 0.5 ms [4]
Switching frequency	1,000 Hz [5]
Connection type	Cable with connector M8, 3-pin, 200 mm [6]
Cable material	PVC
Circuit protection	A [7] B [8] D [9]
Weight	50 g
Special device	✓
Housing material	Plastic, ABS
Optics material	Plastic, PMMA
Enclosure rating	IP67
Items supplied	Stainless steel mounting bracket (1.4301/304) BEF-W100-A
Ambient operating temperature	–25 °C ... +55 °C
Ambient temperature, storage	–40 °C ... +70 °C

[1] Limit values when operated in short-circuit protected network: max. 8 A.
[2] May not exceed or fall below U_V tolerances.
[3] Without load.
[4] Signal transit time with resistive load.
[5] With light/dark ratio 1:1.
[6] Do not bend below 0 °C.
[7] A = V_S connections reverse-polarity protected.
[8] B = inputs and output reverse-polarity protected.
[9] D = outputs overcurrent and short-circuit protected.

Safety-related parameters

$MTTF_D$	1,568 years
DC_{avg}	0 %

Classifications

eCl@ss 5.0	27270904
eCl@ss 5.1.4	27270904
eCl@ss 6.0	27270904
eCl@ss 6.2	27270904
eCl@ss 7.0	27270904
eCl@ss 8.0	27270904
eCl@ss 8.1	27270904
eCl@ss 9.0	27270904
eCl@ss 10.0	27270904

eCl@ss 11.0	27270904
eCl@ss 12.0	27270903
ETIM 5.0	EC002719
ETIM 6.0	EC002719
ETIM 7.0	EC002719
ETIM 8.0	EC002719
UNSPSC 16.0901	39121528

Adjustments

WTB8

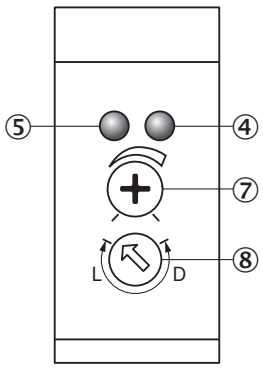

④ Orange LED indicator : switching output active
⑤ LED indicator green: stability indicator
⑦ Adjustment of sensing range
⑧ Light/ dark rotary switch: L = light switching, D = dark switching

chanhvinh.com

Characteristic curve

WTB8, 300 mm

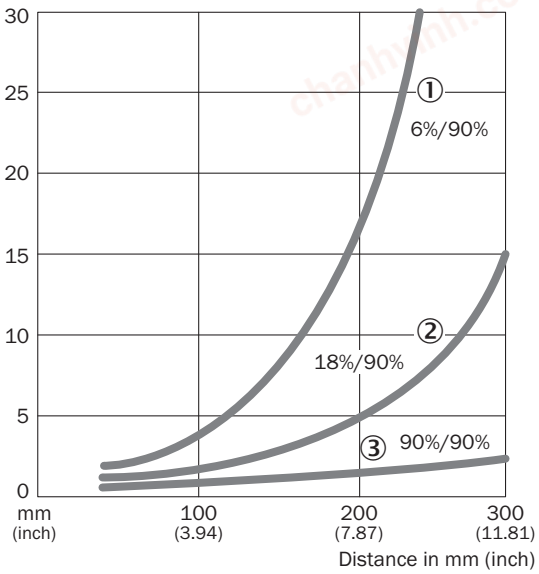

① Sensing range on black, 6% remission factor
② Sensing range on gray, 18% remission factor
③ Sensing range on white, 90% remission factor

Sensing range diagram

WTB8, 300 mm

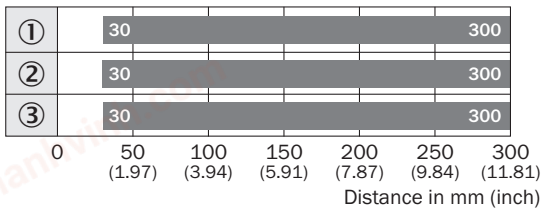

Sensing range

① Sensing range on black, 6% remission factor
② Sensing range on gray, 18% remission factor
③ Sensing range on white, 90% remission factor

chanhvinh.com

Dimensional drawing (Dimensions in mm (inch))

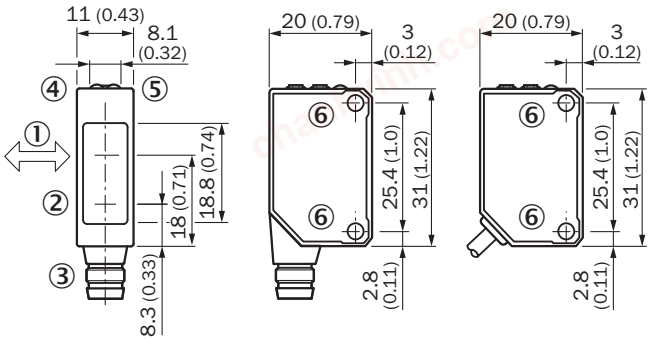

① Standard direction
② Center of optical axis, sender
③ Connection
④ Orange LED indicator : switching output active
⑤ LED indicator green: stability indicator
⑥ Threaded mounting hole M3

Recommended accessories

Other models and accessories ➜ www.sick.com/W8

	Brief description	Type	Part no.
Plug connectors and cables			
	Head A: female connector, M8, 3-pin, straight, A-coded Head B: Flying leads Cable: Sensor/actuator cable, PVC, unshielded, 5 m	YF8U13-050VA1XLEAX	2095884
	Head A: male connector, M8, 3-pin, straight Cable: unshielded	STE-0803-G	6037322

chanhvinh.com

SICK AT A GLANCE

SICK is one of the leading manufacturers of intelligent sensors and sensor solutions for industrial applications. A unique range of products and services creates the perfect basis for controlling processes securely and efficiently, protecting individuals from accidents and preventing damage to the environment.

We have extensive experience in a wide range of industries and understand their processes and requirements. With intelligent sensors, we can deliver exactly what our customers need. In application centers in Europe, Asia and North America, system solutions are tested and optimized in accordance with customer specifications. All this makes us a reliable supplier and development partner.

Comprehensive services complete our offering: SICK LifeTime Services provide support throughout the machine life cycle and ensure safety and productivity.

For us, that is "Sensor Intelligence."

WORLDWIDE PRESENCE:

Contacts and other locations –www.sick.com

SICK
Sensor Intelligence.