chanhvinh.com

Product data sheet



WTB4SL-3P5264H

W4

MINIATURE PHOTOELECTRIC SENSORS

SICK
Sensor Intelligence.

chanhvinh.com

WTB4SL-3P5264H | W4

MINIATURE PHOTOELECTRIC SENSORS



Illustration may differ

Ordering information

Type	Part no.
WTB4SL-3P5264H	1103456

Other models and accessories → www.sick.com/W4

Detailed technical data

Features

Functional principle	Photoelectric proximity sensor
Functional principle detail	Background suppression
Sensing range max.	25 mm ... 300 mm [1]
Sensing range	25 mm ... 300 mm [1]
Emitted beam	
Light source	Laser [2]
Type of light	Visible red light
Light spot size (distance)	Ø 1 mm (170 mm)
Key laser figures	
Normative reference	EN 60825-1:2014, IEC 60825-1:2014 / CDRH 21 CFR 1040.10 & 1040.11
Laser class	1
Wave length	650 nm
Adjustment	Single teach-in button, cable
Special features	External teach
Special applications	Hygienic and washdown zones, Detecting small objects

[1] Object with 90% remission (based on standard white, DIN 5033).

[2] Average service life: 50,000 h at T_U = +25 °C.

[3] Difference between standard/washdown and hygiene: The essential difference between a standard/washdown product and a hygiene product is that where the process and contact with the medium (activity in the vicinity of the food) are concerned, a hygiene product is designed in accordance with the latest standards and hygiene design guidelines, and materials are selected accordingly.

chanhvinh.com

Housing design	Hygiene [3]
Mounting hole	M3

[1] Object with 90% remission (based on standard white, DIN 5033).

[2] Average service life: 50,000 h at T_U = +25 °C.

[3] Difference between standard/washdown and hygiene: The essential difference between a standard/washdown product and a hygiene product is that where the process and contact with the medium (activity in the vicinity of the food) are concerned, a hygiene product is designed in accordance with the latest standards and hygiene design guidelines, and materials are selected accordingly.

Safety-related parameters

$MTTF_D$	326 years (EN ISO 13849-1) [1]
DC_{avg}	0 %
T_M (mission time)	10 years

[1] Mode of calculation: Parts-Count-calculation.

Electrical data

Supply voltage U_B	10 V DC ... 30 V DC [1]
Ripple	< 5 V_{pp} [2]
Current consumption	30 mA [3]
Protection class	III
Digital output	
Type	PNP [4]
Switching mode	Light switching [4]
Output current $I_{max.}$	≤ 100 mA
Response time	≤ 0.5 ms [5]
Switching frequency	1,000 Hz [6]
Circuit protection	A [7] B [8] C [9]
Special feature	D12 adapter shaft

[1] Limit values when operated in short-circuit protected network: max. 8 A.

[2] May not exceed or fall below U_V tolerances.

[3] Without load.

[4] Q = light switching.

[5] Signal transit time with resistive load.

[6] With light/dark ratio 1:1.

[7] A = V_S connections reverse-polarity protected.

[8] B = inputs and output reverse-polarity protected.

[9] C = interference suppression.

Mechanical data

Housing	Rectangular
Design detail	Slim
Dimensions (W x H x D)	15.3 mm x 63.2 mm x 22.2 mm
Connection	Male connector M8, 4-pin [1]
Material	

[1] Max. tightening torque: 0.6 Nm.

chanhvinh.com

Housing	Stainless steel, Stainless steel V4A (1.4404, 316L)
Front screen	Plastic, PMMA
Weight	140 g

[1] Max. tightening torque: 0.6 Nm.

Ambient data

Enclosure rating	IP66 IP67 IP68 IP69K [1]
Ambient operating temperature	–10 °C ... +50 °C
Ambient operating temperature extended	–30 °C ... +55 °C [2] [3]
Ambient temperature, storage	–30 °C ... +70 °C
RoHS certificate	✓

[1] Only in case of correctly mounted IP69K connecting cable.

[2] As of T_a = 50 °C, a max. supply voltage $V_{max.}$ = 24 V and a max. load current $I_{max.}$ = 50 mA is permitted.

[3] Operation below Tu –10 °C is possible if the sensor is already switched on at Tu > –10 °C, then cools down, and the supply voltage is subsequently not switched off. Switching on below Tu –10 °C is not permissible.

Classifications

ECLASS 5.0	27270904
ECLASS 5.1.4	27270904
ECLASS 6.0	27270904
ECLASS 6.2	27270904
ECLASS 7.0	27270904
ECLASS 8.0	27270904
ECLASS 8.1	27270904
ECLASS 9.0	27270904
ECLASS 10.0	27270904
ECLASS 11.0	27270904
ECLASS 12.0	27270903
ETIM 5.0	EC002719
ETIM 6.0	EC002719
ETIM 7.0	EC002719
ETIM 8.0	EC002719
UNSPSC 16.0901	39121528

chanhvinh.com

Connection diagram

Cd-023

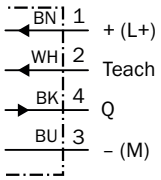

Characteristic curve

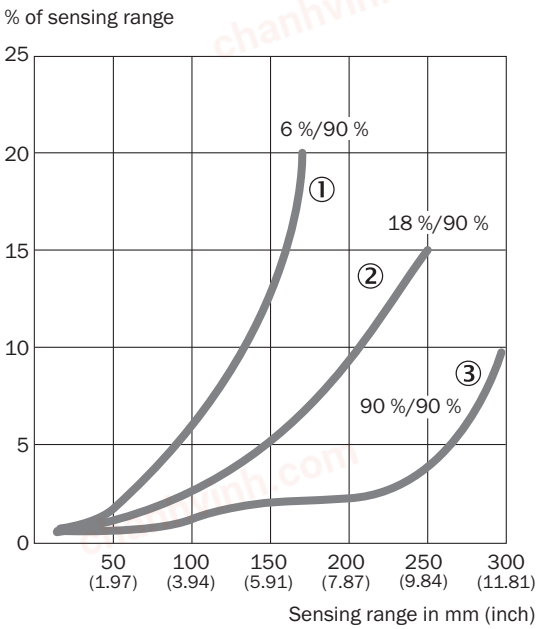

① Sensing range on black, 6% remission factor
② Sensing range on gray, 18% remission factor
③ Sensing range on white, 90% remission factor

chanhvinh.com

WTB4SL-3P5264H | W4

MINIATURE PHOTOELECTRIC SENSORS

Light spot size

Radius in mm (inch)

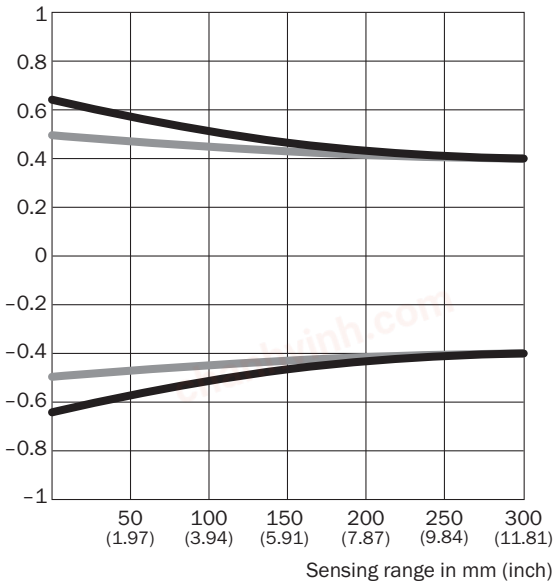

Dimensions in mm (inch)

Sensing range	Vertical	Horizontal
50 mm (1.97)	1.2 (0.05)	1.0 (0.04)
100 mm (3.94)	1.1 (0.04)	1.0 (0.04)
200 mm (7.87)	0.9 (0.04)	0.9 (0.04)
300 mm (11.81)	0.8 (0.03)	0.8 (0.03)

Sensing range diagram

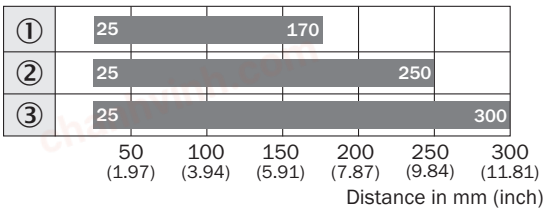

Sensing range typ. max.

① Sensing range on black, 6% remission factor
② Sensing range on gray, 18% remission factor
③ Sensing range on white, 90% remission factor

chanhvinh.com

Dimensional drawing (Dimensions in mm (inch))

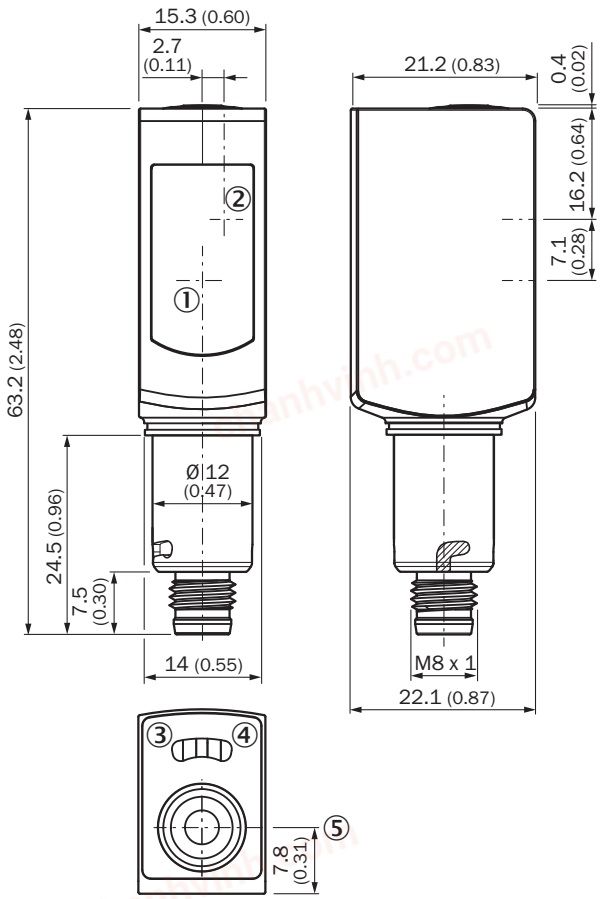

① Center of optical axis, sender
② Center of optical axis, receiver
③ LED indicator yellow: Status of received light beam
④ LED indicator green: Supply voltage active
⑤ Single teach-in button

Recommended accessories

Other models and accessories → www.sick.com/W4

	Brief description	Type	Part no.
Universal bar clamp systems			
	Hygienic design telescopic tube, angled, with bayonet lock with flange, Hygienic Design, Stainless steel V4A (1.4404, 316L), Silicone (seal)	BEF-HDSTRWF	2067777

chanhvinh.com

	Brief description	Type	Part no.
Plug connectors and cables			
	• **Connection type head A:** Female connector, M8, 4-pin, straight • **Connection type head B:** Flying leads • **Signal type:** Sensor/actuator cable • **Cable:** 5 m, 4-wire, PVC • **Description:** Sensor/actuator cable, unshielded • **Connection systems:** Flying leads • **Note:** This product is generally resistant to chemical cleaning agents (see ECOLAB). Please do not use cleaning agents of any other Kind., Not resistant against lactic acid & hydrogen peroxide (H2O2) • **Application:** Hygienic and washdown zones	DOL-0804-G05MNI	6059194

chanhvinh.com

chanhvinh.com

SICK AT A GLANCE

SICK is one of the leading manufacturers of intelligent sensors and sensor solutions for industrial applications. A unique range of products and services creates the perfect basis for controlling processes securely and efficiently, protecting individuals from accidents and preventing damage to the environment.

We have extensive experience in a wide range of industries and understand their processes and requirements. With intelligent sensors, we can deliver exactly what our customers need. In application centers in Europe, Asia and North America, system solutions are tested and optimized in accordance with customer specifications. All this makes us a reliable supplier and development partner.

Comprehensive services complete our offering: SICK LifeTime Services provide support throughout the machine life cycle and ensure safety and productivity.

For us, that is "Sensor Intelligence."

WORLDWIDE PRESENCE:

Contacts and other locations –www.sick.com