chanhvinh.com

Product data sheet



WTB4S-3P1162H

W4

MINIATURE PHOTOELECTRIC SENSORS

SICK
Sensor Intelligence.

chanhvinh.com

WTB4S-3P1162H | W4

MINIATURE PHOTOELECTRIC SENSORS



Illustration may differ

Ordering information

Type	Part no.
WTB4S-3P1162H	1051983

Other models and accessories → www.sick.com/W4

Detailed technical data

Features

Functional principle	Photoelectric proximity sensor
Functional principle detail	Background suppression
Sensing range max.	4 mm ... 500 mm [1]
Sensing range	10 mm ... 350 mm [1]
Emitted beam	
Light source	PinPoint LED [2]
Type of light	Visible red light
Light spot size (distance)	Ø 6.5 mm (150 mm)
Key LED figures	
Wave length	650 nm
Adjustment	Single teach-in button
Special applications	Hygienic and washdown zones
Housing design	Hygiene

[1] Object with 90% remission (based on standard white, DIN 5033).

[2] Average service life: 100,000 h at T_U = +25 °C.

Safety-related parameters

$MTTF_D$	1,186 years
DC_{avg}	0 %
T_M (mission time)	20 years

chanhvinh.com

Electrical data

Supply voltage U_B	10 V DC ... 30 V DC [1]
Ripple	< 5 V_{pp} [2]
Current consumption	30 mA [3]
Protection class	III
Digital output	
Type	PNP
Switching mode	Light/dark switching
Output current $I_{max.}$	≤ 100 mA
Response time	< 0.5 ms [4]
Switching frequency	1,000 Hz [5]
Output function	Complementary
Circuit protection	A, B, C [6] [7] [8]

[1] Limit values, reverse-polarity protected, operation in short-circuit protected network: max. 8 A.
[2] May not exceed or fall below U_V tolerances.
[3] Without load.
[4] Signal transit time with resistive load.
[5] With light/dark ratio 1:1.
[6] A = V_S connections reverse-polarity protected.
[7] B = inputs and output reverse-polarity protected.
[8] C = interference suppression.

Mechanical data

Housing	Rectangular
Design detail	Slim
Dimensions (W x H x D)	15.25 mm x 63.2 mm x 22.15 mm
Connection	Cable, 4-wire, 2 m [1]
Connection detail	
Conductor size	0.14 mm²
Length of cable (L)	2 m [1]
Material	
Housing	Stainless steel, Stainless steel V4A (1.4404, 316L)
Front screen	Plastic, PMMA
Cable	PVC
Weight	80 g

[1] Do not bend below 0 °C.

Ambient data

Enclosure rating	IP66 IP67 IP68 IP69K
Ambient operating temperature	–30 °C ... +70 °C [1] –30 °C ... +60 °C

[1] At UV ≤ 24 V and IA < 30 mA.

Ambient temperature, storage	–30 °C ... +75 °C
UL File No.	FDA, UL No. NRKH.E181493 & cUL No. NRKH7.E181493

[1] At UV ≤ 24 V and IA < 30 mA.

Classifications

ECLASS 5.0	27270904
ECLASS 5.1.4	27270904
ECLASS 6.0	27270904
ECLASS 6.2	27270904
ECLASS 7.0	27270904
ECLASS 8.0	27270904
ECLASS 8.1	27270904
ECLASS 9.0	27270904
ECLASS 10.0	27270904
ECLASS 11.0	27270904
ECLASS 12.0	27270903
ETIM 5.0	EC002719
ETIM 6.0	EC002719
ETIM 7.0	EC002719
ETIM 8.0	EC002719
UNSPSC 16.0901	39121528

Connection type

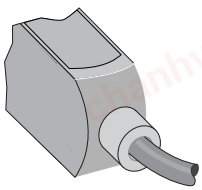

Connection diagram

Cd-094

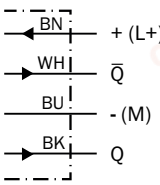

chanhvinh.com

Characteristic curve

WTB4S-3, 500 mm

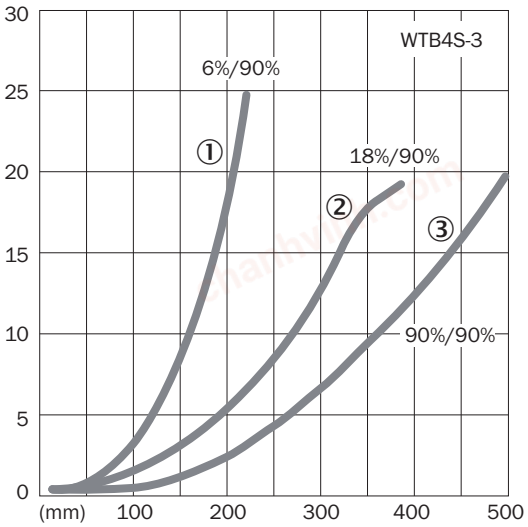

① Sensing range on black, 6% remission factor
② Sensing range on gray, 18% remission factor
③ Sensing range on white, 90% remission factor

Sensing range diagram

WTB4S-3, 500 mm

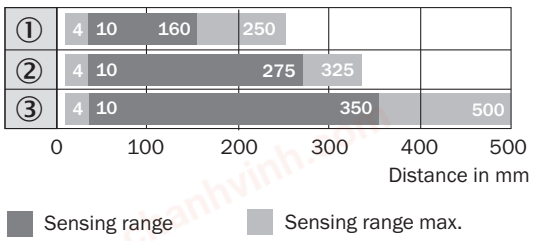

① Sensing range on black, 6% remission factor
② Sensing range on gray, 18% remission factor
③ Sensing range on white, 90% remission factor

chanhvinh.com

Dimensional drawing (Dimensions in mm (inch))

WTB4S-3H, WTF4S-3H, with single teach-in button

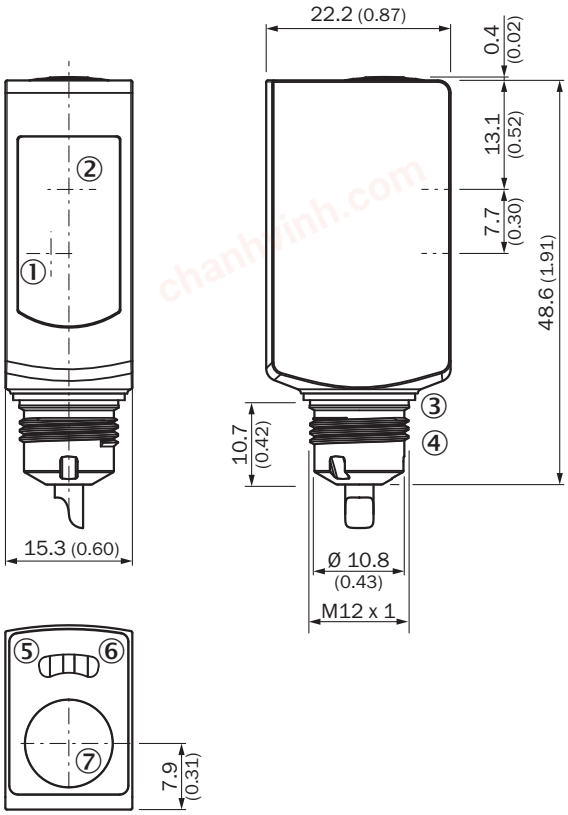

① Center of optical axis, receiver
② Center of optical axis, sender
③ Sealing ring (tightening torque 6 Nm)
④ Connector M12
⑤ LED indicator yellow: Status of received light beam
⑥ LED indicator green: Supply voltage active
⑦ Teach-in button

Recommended accessories

Other models and accessories ➜ www.sick.com/W4

	Brief description	Type	Part no.
Other mounting accessories			
	Diameter 18 mm x 100 mm for W4S-3 Inox hygiene. Hygienic integration without holes and brackets. Cable run inside tube	BEF-MR18G-NA	4065853
Plug connectors and cables			
	• **Connection type head A:** Male connector, M8, 4-pin, straight • **Description:** Unshielded • **Connection systems:** Screw-type terminals • **Permitted cross-section:** 0.14 mm² ... 0.5 mm²	STE-0804-G	6037323

chanhvinh.com

SICK AT A GLANCE

SICK is one of the leading manufacturers of intelligent sensors and sensor solutions for industrial applications. A unique range of products and services creates the perfect basis for controlling processes securely and efficiently, protecting individuals from accidents and preventing damage to the environment.

We have extensive experience in a wide range of industries and understand their processes and requirements. With intelligent sensors, we can deliver exactly what our customers need. In application centers in Europe, Asia and North America, system solutions are tested and optimized in accordance with customer specifications. All this makes us a reliable supplier and development partner.

Comprehensive services complete our offering: SICK LifeTime Services provide support throughout the machine life cycle and ensure safety and productivity.

For us, that is "Sensor Intelligence."

WORLDWIDE PRESENCE:

Contacts and other locations –www.sick.com