chanhvinh.com

Product data sheet



WTB2SC-2P1144S26

W2

MINIATURE PHOTOELECTRIC SENSORS

SICK
Sensor Intelligence.

chanhvinh.com

WTB2SC-2P1144S26 | W2

MINIATURE PHOTOELECTRIC SENSORS



Illustration may differ

Ordering information

Type	Part no.
WTB2SC-2P1144S26	1079773

Other models and accessories → www.sick.com/W2

Detailed technical data

Features

Functional principle	Photoelectric proximity sensor
Functional principle detail	Background suppression
Dimensions (W x H x D)	7.7 mm x 21.8 mm x 13.5 mm
Housing design (light emission)	Rectangular
Sensing range max.	4 mm ... 110 mm [1]
Sensing range	10 mm ... 90 mm [1]
Type of light	Visible red light
Light source	PinPoint LED [2]
Light spot size (distance)	Ø 4.4 mm (60 mm)
Wave length	640 nm
Adjustment	IO-Link
Pin 2 configuration	External input, Teach-in input, Sender off input, Detection output, logic output
Special applications	Detecting small objects
Special features	Switch-off delay, 32 ms Sensing range preset, 26 mm on white (90 % Remission)

[1] Object with 90% remission (based on standard white, DIN 5033).

[2] Average service life: 100,000 h at T_U = +25 °C.

chanhvinh.com

Mechanics/electronics

Supply voltage U_B	10 V DC ... 30 V DC [1]
Ripple	< 5 V_{pp} [2]
Current consumption	20 mA [3]
Switching output	PNP [4] [5]
Switching mode	Light switching [4]
Switching mode selector	Programmable
Output current $I_{max.}$	≤ 50 mA
Response time	< 0.5 ms [6]
Response time Q/ on Pin 2	300 µs ... 450 µs [6] [7]
Switching frequency	1,000 Hz
Switching frequency Q / to pin 2	1,000 Hz [7] [8]
Connection type	Cable, 4-wire, 2 m [9]
Cable material	PVC
Conductor cross section	0.09 mm²
Cable diameter	Ø 3 mm
Circuit protection	A [10] B [11] D [12]
Protection class	III
Housing material	Plastic, ABS/PC
Optics material	Plastic, PMMA
Enclosure rating	IP67
Description	IO-Link
Ambient operating temperature	–25 °C ... +50 °C
Ambient temperature, storage	–40 °C ... +75 °C
UL File No.	NRKH.E181493
Repeatability Q/ on Pin 2:	150 µs [7]

[1] Limit values.
[2] May not exceed or fall below U_V tolerances.
[3] Without load.
[4] Parametrisable via IO-Link.
[5] Pin 4: This switching output must not be connected to another output.
[6] Signal transit time with resistive load.
[7] Valid for Q \ on Pin2, if configured with software.
[8] With light/dark ratio 1:1.
[9] Do not bend below 0 °C.
[10] A = V_S connections reverse-polarity protected.
[11] B = output reverse-polarity protected.
[12] D = outputs overcurrent and short-circuit protected.

Safety-related parameters

$MTTF_D$	1,547 years
DC_{avg}	0 %

chanhvinh.com

WTB2SC-2P1144S26 | W2

MINIATURE PHOTOELECTRIC SENSORS

Communication interface

Communication interface	IO-Link V1.1
Communication Interface detail	COM2 (38,4 kBaud)
Cycle time	2.3 ms
Process data length	16 Bit
Process data structure	Bit 0 = switching signal Q_{L1} Bit 1 = switching signal Q_{L2} Bit 2 ... 15 = empty
VendorID	26
DeviceID HEX	0x800121
DeviceID DEC	8388897

Smart Task

Smart Task name	Base logics
Logic function	Direct AND OR WINDOW Hysteresis
Timer function	Deactivated On delay Off delay ON and OFF delay Impulse (one shot)
Inverter	Yes
Switching frequency	SIO Direct: 1000 Hz [1] SIO Logic: 1000 Hz [2] IOL: 900 Hz [3]
Response time	SIO Direct: 300 µs ... 450 µs [1] SIO Logic: 500 µs ... 600 µs [2] IOL: 500 µs ... 900 µs [3]
Repeatability	SIO Direct: 150 µs [1] SIO Logic: 150 µs [2] IOL: 400 µs [3]
Switching signal	
Switching signal Q_{L1}	Switching output
Switching signal Q_{L2}	Switching output

[1] SIO Direct: sensor operation in standard I/O mode without IO-Link communication and without using internal sensor logic or time parameters (set to "direct"/"deactivated").

[2] SIO Logic: Sensor operation in standard I/O mode without IO-Link communication. Sensor-internal logic or timing parameters plus Automation Functions used.

[3] IOL: Sensor operation with full IO-Link communication and usage of logic, timing and Automation Function parameters.

Diagnosis

Device status	Yes

Classifications

ECLASS 5.0	27270904
ECLASS 5.1.4	27270904
ECLASS 6.0	27270904
ECLASS 6.2	27270904

chanhvinh.com

ECLASS 7.0	27270904
ECLASS 8.0	27270904
ECLASS 8.1	27270904
ECLASS 9.0	27270904
ECLASS 10.0	27270904
ECLASS 11.0	27270904
ECLASS 12.0	27270903
ETIM 5.0	EC002719
ETIM 6.0	EC002719
ETIM 7.0	EC002719
ETIM 8.0	EC002719
UNSPSC 16.0901	39121528

Connection diagram

Cd-367

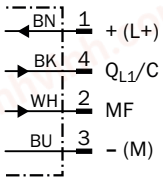

Characteristic curve

WTB2S-2, 110 mm

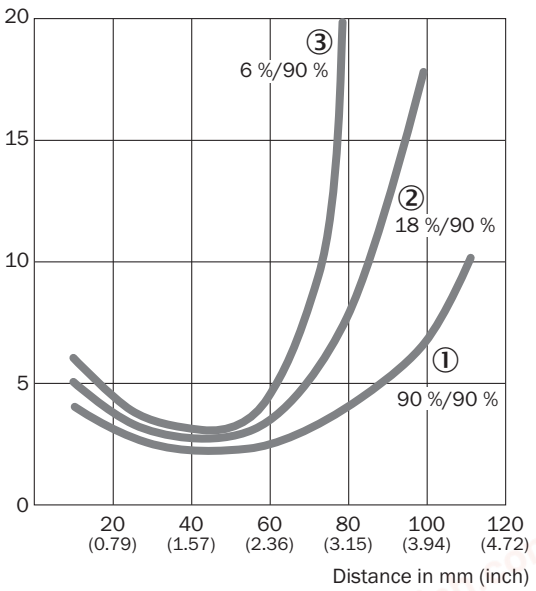

① Sensing range on white, 90% remission factor
② Sensing range on gray, 18% remission factor
③ Sensing range on black, 6% remission factor

chanhvinh.com

Light spot size

WTB2S-2, 110 mm

Spot diameter in mm (inch)

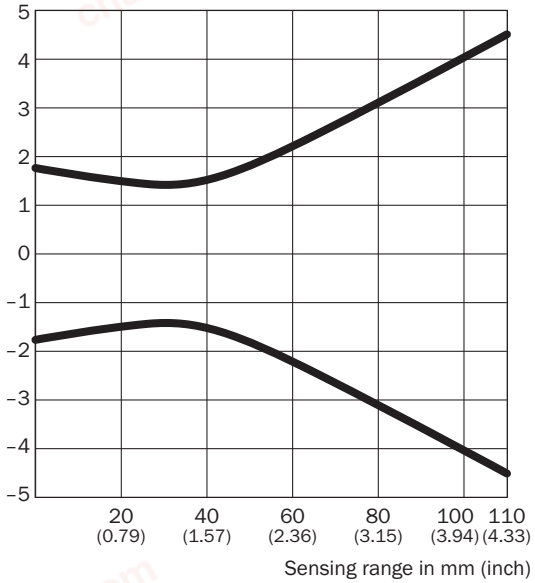

Dimensions in mm (inch)

Sensing range	Spot diameter
0 (0.00)	3.5 (0.14)
20 (0.79)	3.0 (0.12)
40 (1.57)	3.0 (0.12)
60 (2.36)	4.4 (0.17)
100 (3.94)	8.0 (0.31)
110 (4.33)	9.0 (0.35)

Sensing range diagram

WTB2S-2, 110 mm

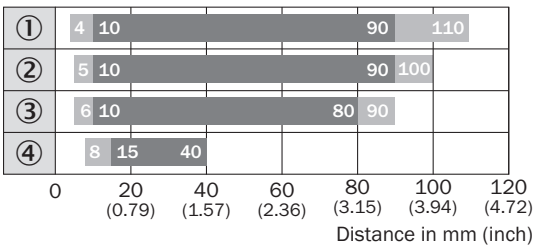

Sensing range Sensing range max.

① Sensing range on white, 90% remission factor
② Sensing range on gray, 18% remission factor
③ Sensing range on black, 6% remission factor
④ Sensing range on ultra black, 1% remission

chanhvinh.com

Dimensional drawing (Dimensions in mm (inch))

WTB2S-2, 66 mm, 90 mm, 110 mm

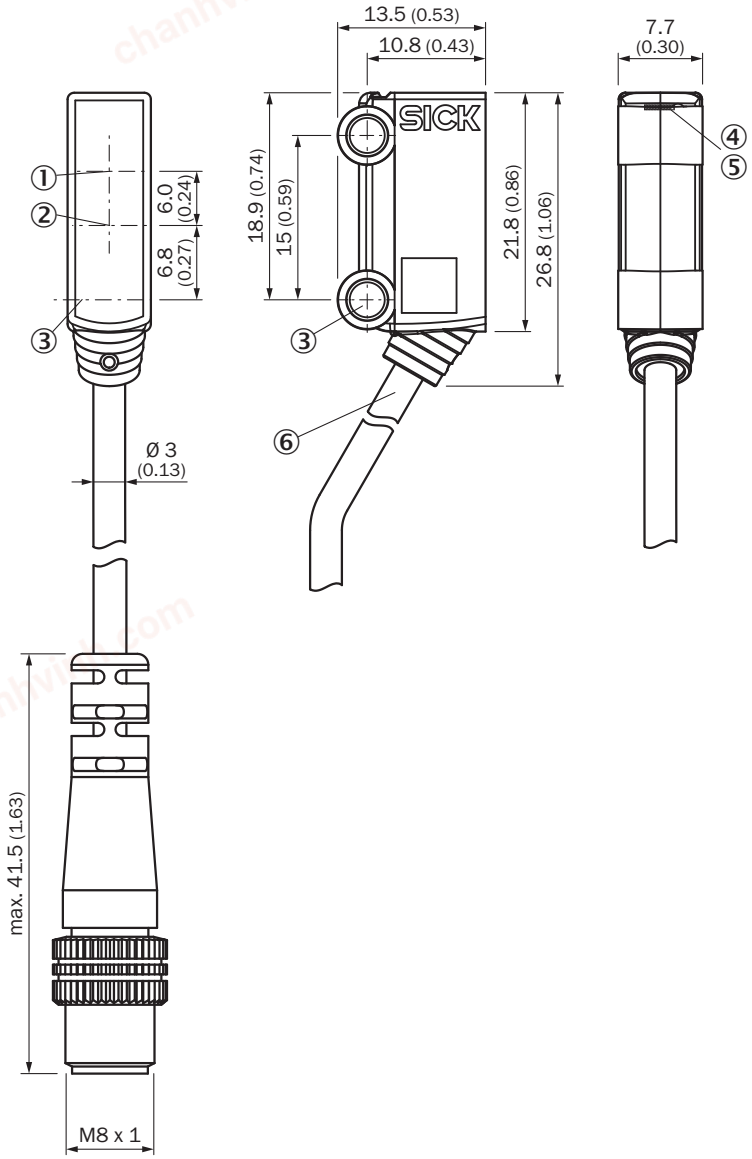

① Optical axis, receiver
② Optical axis, sender
③ Middle axis fixing hole Ø 3.2 mm
④ LED indicator green: Supply voltage active
⑤ LED indicator yellow: Status of received light beam
⑥ Connection

chanhvinh.com

Recommended accessories

Other models and accessories ➜ www.sick.com/W2

	Brief description	Type	Part no.
Plug connectors and cables			
	• **Connection type head A:** Male connector, M8, 4-pin, straight • **Description:** Unshielded • **Connection systems:** Screw-type terminals • **Permitted cross-section:** 0.14 mm² ... 0.5 mm²	STE-0804-G	6037323

Recommended services

Additional services ➜ www.sick.com/W2

	Type	Part no.
Function Block Factory		
• **Description:** The Function Block Factory supports common programmable logic controllers (PLCs) from various manufacturers, such as Siemens, Beckhoff, Rockwell Automation and B&R. More information on the FBF can be found here. • **Note:** You can configure your function block at Function Block Factory. As a login please use your SICK ID.	Function Block Factory	On request

chanhvinh.com

SICK AT A GLANCE

SICK is one of the leading manufacturers of intelligent sensors and sensor solutions for industrial applications. A unique range of products and services creates the perfect basis for controlling processes securely and efficiently, protecting individuals from accidents and preventing damage to the environment.

We have extensive experience in a wide range of industries and understand their processes and requirements. With intelligent sensors, we can deliver exactly what our customers need. In application centers in Europe, Asia and North America, system solutions are tested and optimized in accordance with customer specifications. All this makes us a reliable supplier and development partner.

Comprehensive services complete our offering: SICK LifeTime Services provide support throughout the machine life cycle and ensure safety and productivity.

For us, that is "Sensor Intelligence."

WORLDWIDE PRESENCE:

Contacts and other locations –www.sick.com