chanhvinh.com

Product data sheet



WL4S-3P1032HS02

W4

MINIATURE PHOTOELECTRIC SENSORS

SICK
Sensor Intelligence.

chanhvinh.com

WL4S-3P1032HS02 | W4

MINIATURE PHOTOELECTRIC SENSORS



Illustration may differ

Ordering information

Type	Part no.
WL4S-3P1032HS02	1089545

Other models and accessories → www.sick.com/W4

Detailed technical data

Features

Functional principle	Photoelectric retro-reflective sensor
Functional principle detail	Autocollimation
Sensing range max.	0 m ... 5 m [1]
Sensing range	0 m ... 3 m [1]
Polarisation filters	Yes
Emitted beam	
Light source	PinPoint LED [2]
Type of light	Visible red light
Light spot size (distance)	Ø 45 mm (1.5 m)
Key LED figures	
Wave length	650 nm
Adjustment	Single teach-in button
Special features	Connection cable 2 m
Special applications	Hygienic and washdown zones
Housing design	Hygiene

[1] Reflector PL80A.

[2] Average service life: 100,000 h at T_U = +25 °C.

chanhvinh.com

Electrical data

Supply voltage U_B	10 V DC ... 30 V DC [1]
Ripple	< 5 V_{pp} [2]
Current consumption	30 mA [3]
Protection class	III
Digital output	
Type	PNP
Switching mode	Light/dark switching
Output current $I_{max.}$	≤ 100 mA
Response time	< 0.5 ms [4]
Switching frequency	1,000 Hz [5]
Circuit protection	A, B, C [6] [7] [8]
Special feature	M12 adapter thread

[1] Limit values, reverse-polarity protected, operation in short-circuit protected network: max. 8 A.
[2] May not exceed or fall below U_V tolerances.
[3] Without load.
[4] Signal transit time with resistive load.
[5] With light/dark ratio 1:1.
[6] A = V_S connections reverse-polarity protected.
[7] B = inputs and output reverse-polarity protected.
[8] C = interference suppression.

Mechanical data

Housing	Rectangular
Design detail	Slim
Dimensions (W x H x D)	15.25 mm x 63.2 mm x 22.15 mm
Connection	Cable, 4-wire, 5 m [1]
Connection detail	
Conductor size	0.14 mm²
Length of cable (L)	5 m [1]
Material	
Housing	Stainless steel, Stainless steel V4A (1.4404, 316L)
Front screen	Plastic, PMMA
Cable	PVC
Weight	125 g

[1] Do not bend below 0 °C.

Ambient data

Enclosure rating	IP66 IP67 IP68 IP69K
Ambient operating temperature	–30 °C ... +70 °C [1] –30 °C ... +60 °C

[1] At UV ≤ 24 V and IA < 30 mA.

chanhvinh.com

Ambient temperature, storage	–30 °C ... +75 °C
UL File No.	FDA, UL No. NRKH.E181493 & cUL No. NRKH7.E181493

[1] At UV ≤ 24 V and IA < 30 mA.

Classifications

ECLASS 5.0	27270902
ECLASS 5.1.4	27270902
ECLASS 6.0	27270902
ECLASS 6.2	27270902
ECLASS 7.0	27270902
ECLASS 8.0	27270902
ECLASS 8.1	27270902
ECLASS 9.0	27270902
ECLASS 10.0	27270902
ECLASS 11.0	27270902
ECLASS 12.0	27270902
ETIM 5.0	EC002717
ETIM 6.0	EC002717
ETIM 7.0	EC002717
ETIM 8.0	EC002717
UNSPSC 16.0901	39121528

Connection type

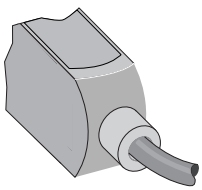

chanhvinh.com

Characteristic curve

WL4S-3, WLG4S-3, 5 m

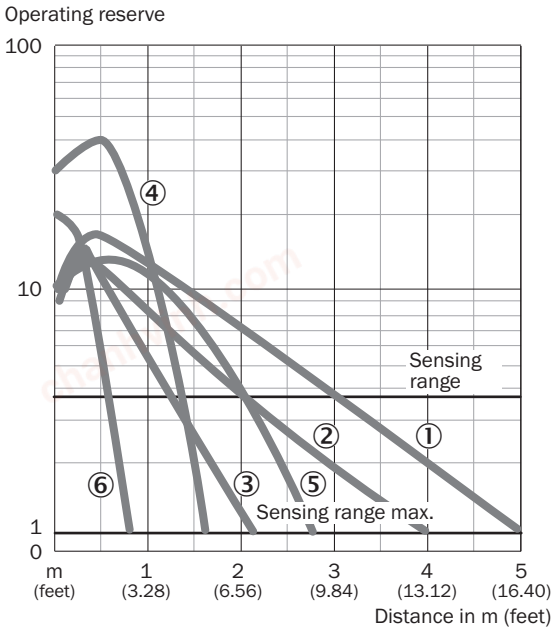

① Reflector PL80A
② Reflector PL40A
③ Reflector PL20A
④ PL10F reflector
⑤ Reflector P250 CHEM
⑥ Reflective tape REF-IRF-56

Sensing range diagram

WL4S-3, WLG4S-3, 5 m

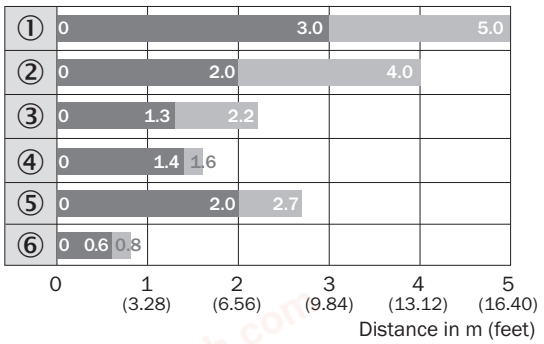

Sensing range Sensing range max.

① Reflector PL80A
② Reflector PL40A
③ Reflector PL20A
④ PL10F reflector
⑤ Reflector P250 CHEM
⑥ Reflective tape REF-IRF-56

Dimensional drawing (Dimensions in mm (inch))

WL4S-3H, WLG4S-3H, with single teach-in button

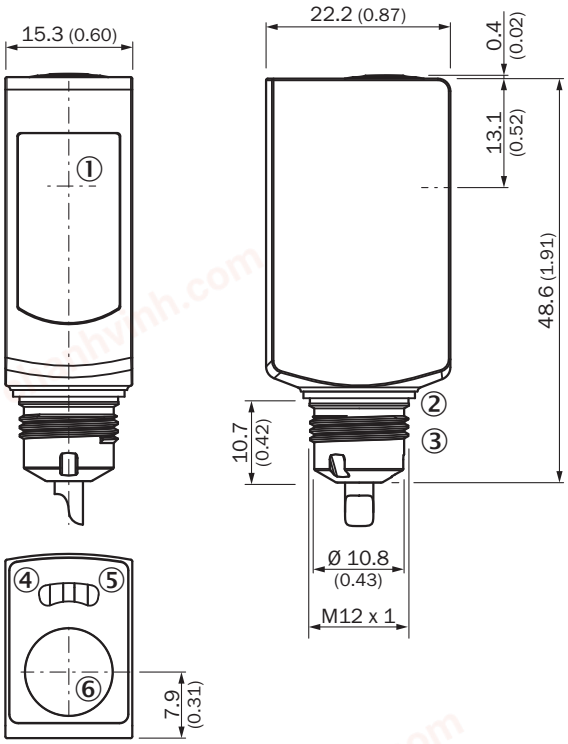

① Center of optical axis
② Sealing ring (tightening torque 6 Nm)
③ Connector M12
④ LED indicator yellow: Status of received light beam
⑤ LED indicator green: Supply voltage active
⑥ Teach-in button

Recommended accessories

Other models and accessories ➜ www.sick.com/W4

	Brief description	Type	Part no.
Other mounting accessories			
	Diameter 18 mm x 100 mm for W4S-3 Inox hygiene. Hygienic integration without holes and brackets. Cable run inside tube	BEF-MR18G-NA	4065853
Plug connectors and cables			
	• **Connection type head A:** Male connector, M8, 4-pin, straight • **Description:** Unshielded • **Connection systems:** Screw-type terminals • **Permitted cross-section:** 0.14 mm² ... 0.5 mm²	STE-0804-G	6037323
Reflectors			
	Stainless steel reflector, hygienic design, chemically resistant, Enclosure rating IP 69K, M12-adapter thread, PMMA front screens, 25 mm, Stainless steel V4A (1.4404, 316L), M12-adapter thread	PLH25-M12	2063403

chanhvinh.com

SICK AT A GLANCE

SICK is one of the leading manufacturers of intelligent sensors and sensor solutions for industrial applications. A unique range of products and services creates the perfect basis for controlling processes securely and efficiently, protecting individuals from accidents and preventing damage to the environment.

We have extensive experience in a wide range of industries and understand their processes and requirements. With intelligent sensors, we can deliver exactly what our customers need. In application centers in Europe, Asia and North America, system solutions are tested and optimized in accordance with customer specifications. All this makes us a reliable supplier and development partner.

Comprehensive services complete our offering: SICK LifeTime Services provide support throughout the machine life cycle and ensure safety and productivity.

For us, that is "Sensor Intelligence."

WORLDWIDE PRESENCE:

Contacts and other locations –www.sick.com

SICK
Sensor Intelligence.