chanhvinh.com

Product data sheet



VTE18-4P2740

V18

CYLINDRICAL PHOTOELECTRIC SENSORS

SICK
Sensor Intelligence.

chanhvinh.com

VTE18-4P2740 | V18

CYLINDRICAL PHOTOELECTRIC SENSORS



Illustration may differ

Ordering information

Type	Part no.
VTE18-4P2740	6013479

Other models and accessories → www.sick.com/V18

Detailed technical data

Features

Functional principle	Photoelectric proximity sensor
Functional principle detail	Energetic
Dimensions (W x H x D)	18 mm x 18 mm x 78 mm
Housing design (light emission)	Cylindrical
Housing length	78 mm
Thread diameter (housing)	M18 x 1
Optical axis	Axial
Sensing range max.	3 mm ... 200 mm [1]
Sensing range	3 mm ... 170 mm
Focus	Approx. 2.8°
Type of light	Infrared light
Light source	LED [2]
Light spot size (distance)	Ø 10 mm (200 mm)
Angle of dispersion	Approx. 2.8°
Adjustment	Potentiometer, 270° (Sensing range)

[1] Object with 90% remission (based on standard white, DIN 5033).

[2] Average service life: 100,000 h at T_U = +25 °C.

chanhvinh.com

Mechanics/electronics

Supply voltage U_B	10 V DC ... 30 V DC [1]
Ripple	± 10 % [2]
Current consumption	30 mA [3]
Switching output	PNP [4]
Switching mode	Light/dark switching [4]
Switching mode selector	Selectable via L/D control cable
Output current $I_{max.}$	≤ 100 mA
Response time	≤ 2 ms [5]
Switching frequency	250 Hz [6]
Connection type	Male connector M12, 4-pin
Circuit protection	A [7] B [8] C [9] D [10]
Protection class	III
Weight	100 g
Housing material	Plastic, PBT/PC
Optics material	Plastic, PMMA
Enclosure rating	IP67
Ambient operating temperature	–25 °C ... +70 °C
UL File No.	NMFT2.E175606

[1] Limit values.
[2] May not exceed or fall below U_V tolerances.
[3] Without load.
[4] Control wire open: dark switching D.ON.
[5] Signal transit time with resistive load.
[6] With light/dark ratio 1:1.
[7] A = V_S connections reverse-polarity protected.
[8] B = inputs and output reverse-polarity protected.
[9] C = interference suppression.
[10] D = outputs overcurrent and short-circuit protected.

Classifications

eCl@ss 5.0	27270903
eCl@ss 5.1.4	27270903
eCl@ss 6.0	27270903
eCl@ss 6.2	27270903
eCl@ss 7.0	27270903
eCl@ss 8.0	27270903
eCl@ss 8.1	27270903
eCl@ss 9.0	27270903
eCl@ss 10.0	27270904
eCl@ss 11.0	27270904

eCl@ss 12.0	27270903
ETIM 5.0	EC001821
ETIM 6.0	EC001821
ETIM 7.0	EC002719
ETIM 8.0	EC002719
UNSPSC 16.0901	39121528

Adjustments

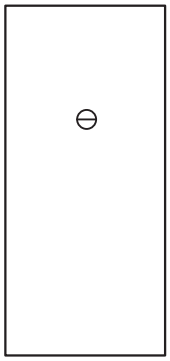

Connection type



Connection diagram

Cd-087

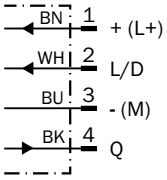

chanhvinh.com

Characteristic curve

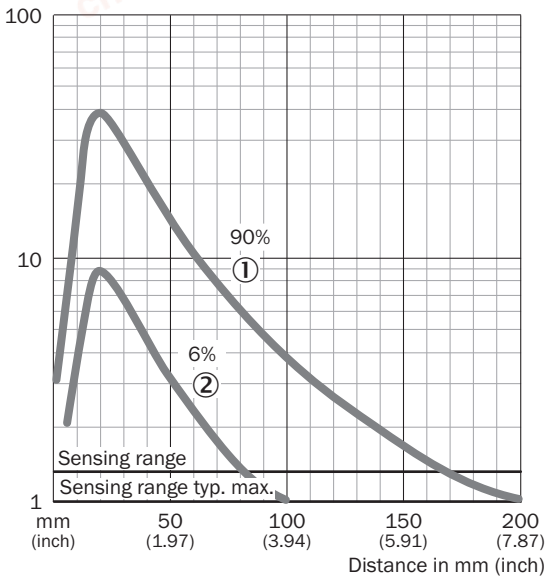

Sensing range diagram

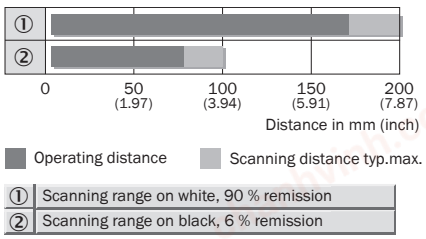

①	Scanning range on white, 90 % remission
②	Scanning range on black, 6 % remission

chanhvinh.com

VTE18-4P2740 | V18

CYLINDRICAL PHOTOELECTRIC SENSORS

Dimensional drawing (Dimensions in mm (inch))

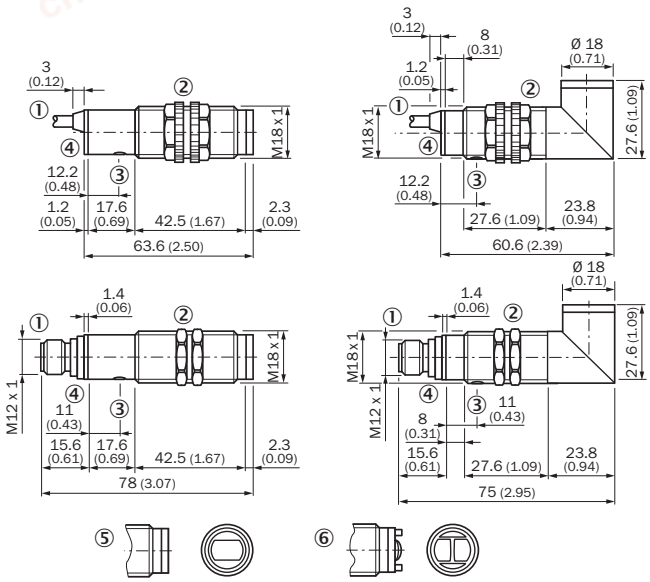

① Connecting cable or connector
② Fastening nut, 22 mm hex, made of plastic for equipment with plastic housingFastening nut, 24 mm hex, made of metal for equipment with metal housing
③ Sensitivity control
④ Signal strength indicator, LED, yellow

Recommended accessories

Other models and accessories ➜ www.sick.com/V18

	Brief description	Type	Part no.
Mounting brackets and plates			
	Mounting bracket for M18 sensors, steel, zinc coated, without mounting hardware	BEF-WN-M18	5308446
Plug connectors and cables			
	Head A: female connector, M12, 4-pin, straight, A-coded Head B: Flying leads Cable: Sensor/actuator cable, PVC, unshielded, 5 m	YF2A14-050VB3XLEAX	2096235
	Head A: male connector, M12, 4-pin, straight Cable: unshielded	STE-1204-G	6009932

chanhvinh.com

SICK AT A GLANCE

SICK is one of the leading manufacturers of intelligent sensors and sensor solutions for industrial applications. A unique range of products and services creates the perfect basis for controlling processes securely and efficiently, protecting individuals from accidents and preventing damage to the environment.

We have extensive experience in a wide range of industries and understand their processes and requirements. With intelligent sensors, we can deliver exactly what our customers need. In application centers in Europe, Asia and North America, system solutions are tested and optimized in accordance with customer specifications. All this makes us a reliable supplier and development partner.

Comprehensive services complete our offering: SICK LifeTime Services provide support throughout the machine life cycle and ensure safety and productivity.

For us, that is “Sensor Intelligence.”

WORLDWIDE PRESENCE:

Contacts and other locations –www.sick.com