chanhvinh.com

Product data sheet



VS/VE18-2T2430

V18

CYLINDRICAL PHOTOELECTRIC SENSORS

SICK
Sensor Intelligence.

chanhvinh.com

VS/VE18-2T2430 | V18

CYLINDRICAL PHOTOELECTRIC SENSORS



Illustration may differ

Ordering information

Type	Part no.
VS/VE18-2T2430	6011381

Other models and accessories → www.sick.com/V18

Detailed technical data

Features

Functional principle	Through-beam photoelectric sensor
Dimensions (W x H x D)	18 mm x 18 mm x 92 mm
Housing design (light emission)	Cylindrical
Housing length	92 mm
Thread diameter (housing)	M18 x 1
Optical axis	Axial
Sensing range max.	0 m ... 22 m
Sensing range	0 m ... 16 m
Focus	2.9°
Type of light	Infrared light
Light source	LED [1]
Light spot size (distance)	Ø 800 mm (16 m)
Angle of dispersion	2.9°
Adjustment	None

[1] Average service life: 100,000 h at T_U = +25 °C.

Mechanics/electronics

Supply voltage U_B	20 V AC ... 253 V AC [1]
Mains frequency	50 Hz, 60 Hz
Current consumption	45 mA [2]
Switching output	TRIAC
Switching mode	Dark switching
Output current $I_{max.}$	≤ 300 mA [3]

[1] Limit values.
[2] Without load.
[3] Depending on supply voltage VS.
[4] Signal transit time with resistive load.
[5] With light/dark ratio 1:1.
[6] C = interference suppression.

chanhvinh.com

Response time	≤ 20 ms [4]
Switching frequency	25 Hz [5]
Connection type	Male connector M12, 4-pin
Circuit protection	C [6]
Protection class	III
Weight	60 g
Housing material	Plastic, PBT/PC
Optics material	Plastic, PMMA
Enclosure rating	IP67
Ambient operating temperature	–25 °C ... +70 °C
UL File No.	NMFT2.E175606

[1] Limit values.
[2] Without load.
[3] Depending on supply voltage VS.
[4] Signal transit time with resistive load.
[5] With light/dark ratio 1:1.
[6] C = interference suppression.

Classifications

eCl@ss 5.0	27270901
eCl@ss 5.1.4	27270901
eCl@ss 6.0	27270901
eCl@ss 6.2	27270901
eCl@ss 7.0	27270901
eCl@ss 8.0	27270901
eCl@ss 8.1	27270901
eCl@ss 9.0	27270901
eCl@ss 10.0	27270901
eCl@ss 11.0	27270901
eCl@ss 12.0	27270901
ETIM 5.0	EC002716
ETIM 6.0	EC002716
ETIM 7.0	EC002716
ETIM 8.0	EC002716
UNSPSC 16.0901	39121528

Connection type

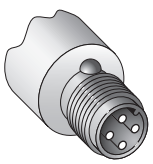

Connection diagram

Cd-223

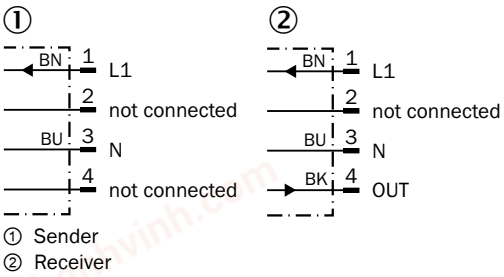

① Sender
② Receiver

Characteristic curve

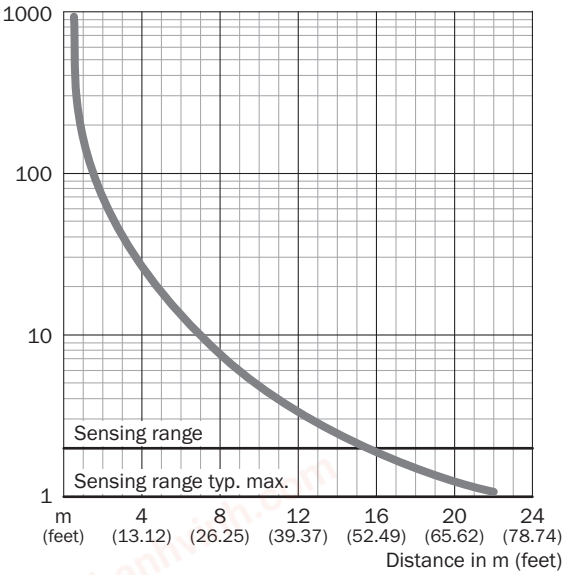

chanhvinh.com

Dimensional drawing (Dimensions in mm (inch))

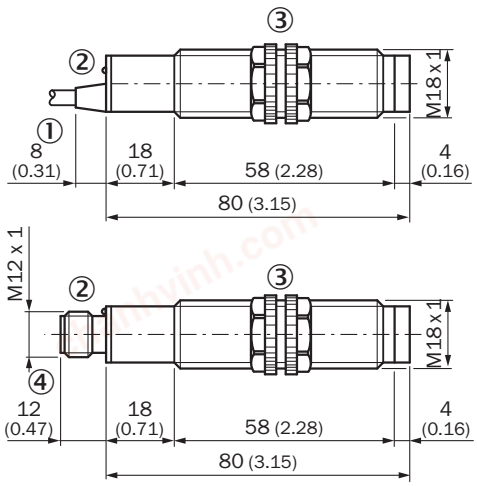

① Connection cable
② LED signal strength indicator
③ Fastening nuts, 22 mm hex (included)
④ Connector M12, 4- pin

Recommended accessories

Other models and accessories ➜ www.sick.com/V18

	Brief description	Type	Part no.
Mounting brackets and plates			
	Mounting bracket for M18 sensors, steel, zinc coated, without mounting hardware	BEF-WN-M18	5308446
Plug connectors and cables			
	Head A: female connector, M12, 4-pin, straight, A-coded Head B: Flying leads Cable: Sensor/actuator cable, PVC, unshielded, 5 m	YF2A14-050VB3XLEAX	2096235
	Head A: male connector, M12, 4-pin, straight Cable: unshielded	STE-1204-G	6009932

chanhvinh.com

SICK AT A GLANCE

SICK is one of the leading manufacturers of intelligent sensors and sensor solutions for industrial applications. A unique range of products and services creates the perfect basis for controlling processes securely and efficiently, protecting individuals from accidents and preventing damage to the environment.

We have extensive experience in a wide range of industries and understand their processes and requirements. With intelligent sensors, we can deliver exactly what our customers need. In application centers in Europe, Asia and North America, system solutions are tested and optimized in accordance with customer specifications. All this makes us a reliable supplier and development partner.

Comprehensive services complete our offering: SICK LifeTime Services provide support throughout the machine life cycle and ensure safety and productivity.

For us, that is "Sensor Intelligence."

WORLDWIDE PRESENCE:

Contacts and other locations –www.sick.com

SICK
Sensor Intelligence.