chanhvinh.com

SICK.COM



DATA SHEET

SP1-1000

System plugs deTec and deTem
System plugs and extension modules

SICK Sensor Intelligence

chanhvinh.com



Illustration may differ

SYSTEM PLUGS AND EXTENSION MODULES

SP1-1000

ORDERING INFORMATION

Type	part no.
SP1-1000	2076832

Further device versions and accessories at www.sick.com/System_plugs_deTec_and_deTem

DETAILED TECHNICAL DATA

FEATURES

Compatible devices	deTec4, deTem4, deTem4 A/P
Function range	SP1
System connection	Plug, M12, 5-pin
Extension connection	Without extension connection
Configuration method	DIP switch
Items supplied	System plug

FUNCTIONS

Protective operation	✓
Automatic calibration of the protective field width	✓

INTERFACES

PIN assignment		See table in “Pin assignment” graphic
System connection		Plug, M12, 5-pin
	Length of cable	200 mm
	Cable diameter	5 mm
Extension connection		Without extension connection

ELECTRONICS

Protection class	III (IEC 61140)
Supply voltage V_S	24 V DC (19.2 V ... 28.8 V)
Ripple	≤ 10 %

chanhvinh.com

AMBIENT DATA

Ambient operating temperature	–30 °C ... +55 °C
Storage temperature	–30 °C ... +70 °C
Air humidity	15 % ... 95 %, Non-condensing
Vibration resistance	5 g, 10 Hz ... 55 Hz (IEC 60068-2-6)
Shock resistance	10 g, 16 ms (IEC 60068-2-27)

CERTIFICATES

EU declaration of conformity	✓

DIMENSIONAL DRAWING SP1-1200

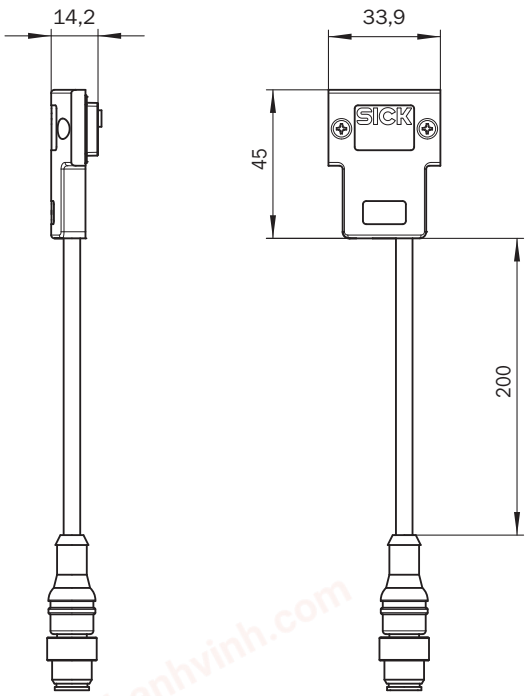

Dimensions in mm (inch)

PINOUTS DETEM4 A/P SYSTEM CONNECTION

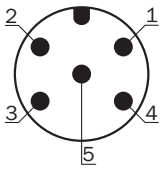

Pin	Active unit
1	+24 V DC
2	OSSD1
3	0 V DC
4	OSSD2
5	N. c.
For details see operating instructions	

chanhvinh.com

PINOUTS DETEC4 SYSTEM CONNECTION

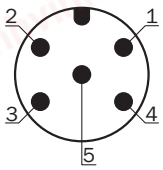

Pin	Sender	Receiver
1	+24 V DC	+24 V DC
2	In2Laser alignment aid button	OSSD1
3	0 V DC	0 V DC
4	In1Laser alignment aid switch	OSSD2
5	MFP1	MFP1
	For details see operating instructions	

Further information as well as suitable accessories, example applications and downloads such as CAD dimensional models, operating instructions and software can be found at www.sick.com/2076832

chanhvinh.com

SICK AG
WALDKIRCH
GERMANY
SICK.COM

SICK AT A GLANCE

SICK is a leading global technology company for intelligent sensors and integrated solutions in industrial automation. Our technologies set benchmarks, making your industrial processes more efficient, safer and more sustainable – both in logistics and manufacturing operations.

SICK combines sensor intelligence with industry expertise and certified consulting services. We provide the ideal foundation for scalable as well as tailor-made automation solutions and create added value along the entire value chain. Our close partnerships with our customers are more than just a promise: Together, we optimize productivity, improve quality, protect health and safety, and help build a sustainable future. All with empathy and trust.

Since 1946, we have been developing innovative technologies with passion and a pioneering spirit. With a global network in around 40 countries, SICK has a global presence and is always close by. The company's headquarters are located in Waldkirch near Freiburg, Germany. Our customers benefit from our understanding of both local and global requirements, which enables us to deliver tailor-made solutions

SICK
Sensor Intelligence