chanhvinh.com

Product data sheet

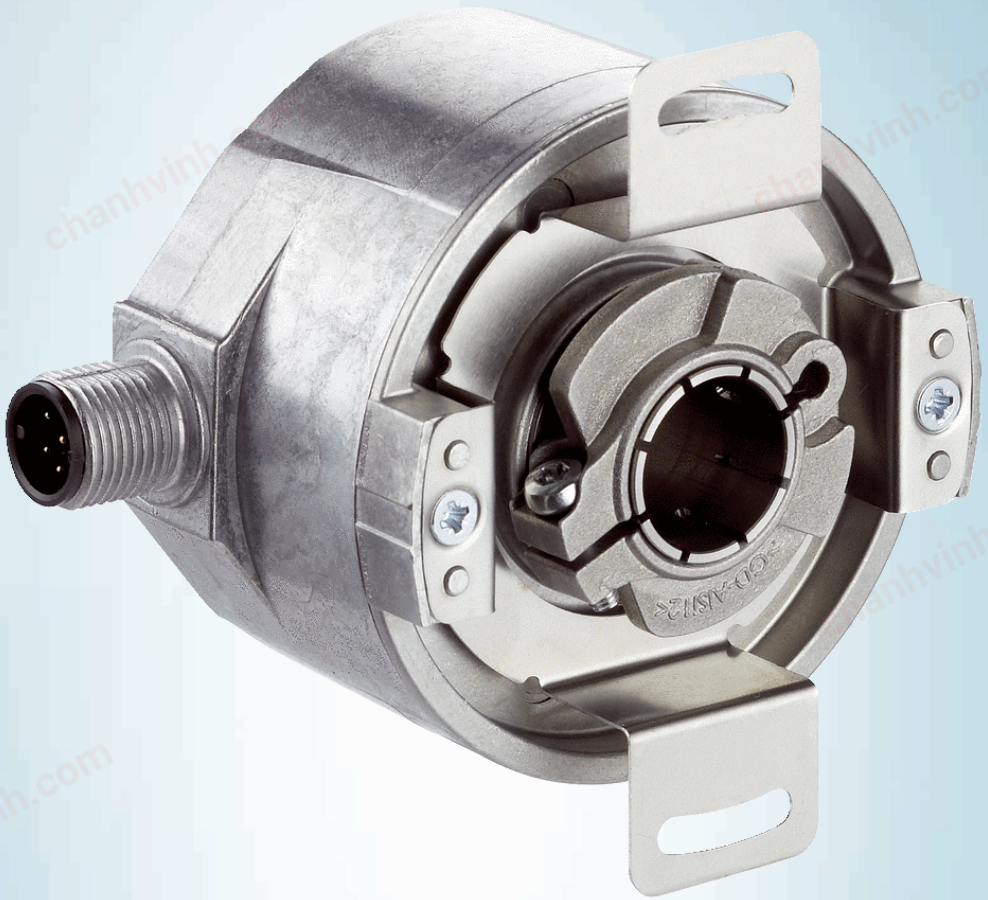

SFM60-HLBB4K02

SFS/SFM60

MOTOR FEEDBACK SYSTEMS ROTARY HIPERFACE®

SICK
Sensor Intelligence.

chanhvinh.com

SFM60-HLBB4K02 | SFS/SFM60

MOTOR FEEDBACK SYSTEMS ROTARY HIPERFACE®

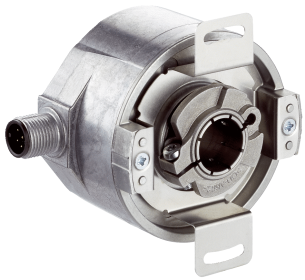

Illustration may differ

Ordering information

Type	Part no.
SFM60-HLBB4K02	1116779

Other models and accessories → www.sick.com/SFS_SFM60

Detailed technical data

Performance

Sine/cosine periods per revolution	1,024
Number of the absolute ascertainable revolutions	4,096
Total number of steps	134,217,728
Measuring step	0.3 ″ For interpolation of the sine/cosine signals with, e. g., 12 bits
Integral non-linearity	Typ. ± 45 ″, Error limits for evaluating sine/cosine period, without mechanical tension of the stator coupling
Differential non-linearity	± 7 ″, Non-linearity within a sine/cosine period
Operating speed	≤ 6,000 min^{-1}, up to which the absolute position can be reliably produced
Available memory area	1,792 Byte
System accuracy	± 52 ″

Interfaces

Type of code for the absolute value	Binary
Code sequence	Rising, For clockwise shaft rotation, looking in direction “A” (see dimensional drawing)
Communication interface	HIPERFACE®

Electrical data

Connection type	Male connector, M12, 8-pin, radial
Supply voltage	7 V DC ... 12 V DC
Recommended supply voltage	8 V DC
Power consumption	< 80 mA (without load)
Output frequency for sine/cosine signals	≤ 200 kHz
MTTF: mean time to dangerous failure	230 years (EN ISO 13849) [1]

[1] This product is a standard product and does not constitute a safety component as defined in the Machinery Directive. Calculation based on nominal load of components, average ambient temperature 60 °C, frequency of use 8760 h/a. All electronic failures are considered hazardous. For more information, see document no. 8015532.

Mechanical data

Shaft version	Blind hollow shaft

[1] Allow for self-heating of 3.3 K per 1,000 rpm when designing the operating temperature range.

chanhvinh.com

Shaft diameter	10 mm
Shaft material	Stainless steel
Flange material	Zinc diecast
Housing material	Aluminum die cast
Flange type / stator coupling	Stator coupling
Dimensions	See dimensional drawing
Weight	≤ 0.25 kg
Moment of inertia of the rotor	40 gcm²
Operating speed	≤ 9,000 min^{-1} [1]
Angular acceleration	≤ 500,000 rad/s²
Operating torque	0.6 Ncm (+20 °C)
Start up torque	+ 0.8 Ncm (+20 °C)
Permissible movement of the drive element, static	± 0.3 mm radial ± 0.5 mm axial
Permissible movement of the drive element, dynamic	± 0.1 mm radial ± 0.2 mm axial
Life of ball bearings	3.6 x 10^9 revolutions

[1] Allow for self-heating of 3.3 K per 1,000 rpm when designing the operating temperature range.

Ambient data

Operating temperature range	–40 °C ... +115 °C
Storage temperature range	–40 °C ... +115 °C, without package
Relative humidity/condensation	90 %, Condensation not permitted
Resistance to shocks	100 g, 6 ms (according to EN 60068-2-27)
Frequency range of resistance to vibrations	20 g, 10 Hz ... 2,000 Hz (according to EN 60068-2-6)
EMC	According to EN 61000-6-2 and EN 61000-6-3 [1]
Enclosure rating	IP65, with mating connector inserted (according to IEC 60529)

[1] The EMC according to the standards quoted is achieved when the motor feedback system is mounted in an electrically conductive housing, which is connected to the central earthing point of the motor controller via a cable screen. The GND-(0 V) connection of the supply voltage is also grounded here. If other shielding concepts are used, users must perform their own tests.

Classifications

ECl@ss 5.0	27270590
ECl@ss 5.1.4	27270590
ECl@ss 6.0	27270590
ECl@ss 6.2	27270590
ECl@ss 7.0	27270590
ECl@ss 8.0	27270590
ECl@ss 8.1	27270590
ECl@ss 9.0	27270590
ECl@ss 10.0	27273805
ECl@ss 11.0	27273901
ETIM 5.0	EC001486
ETIM 6.0	EC001486

chanhvinh.com

SFM60-HLBB4K02 | SFS/SFM60

MOTOR FEEDBACK SYSTEMS ROTARY HIPERFACE®

ETIM 7.0	EC001486
ETIM 8.0	EC001486
UNSPSC 16.0901	41112113

Dimensional drawing (Dimensions in mm (inch))

Blind hollow shaft, male connector - standard system

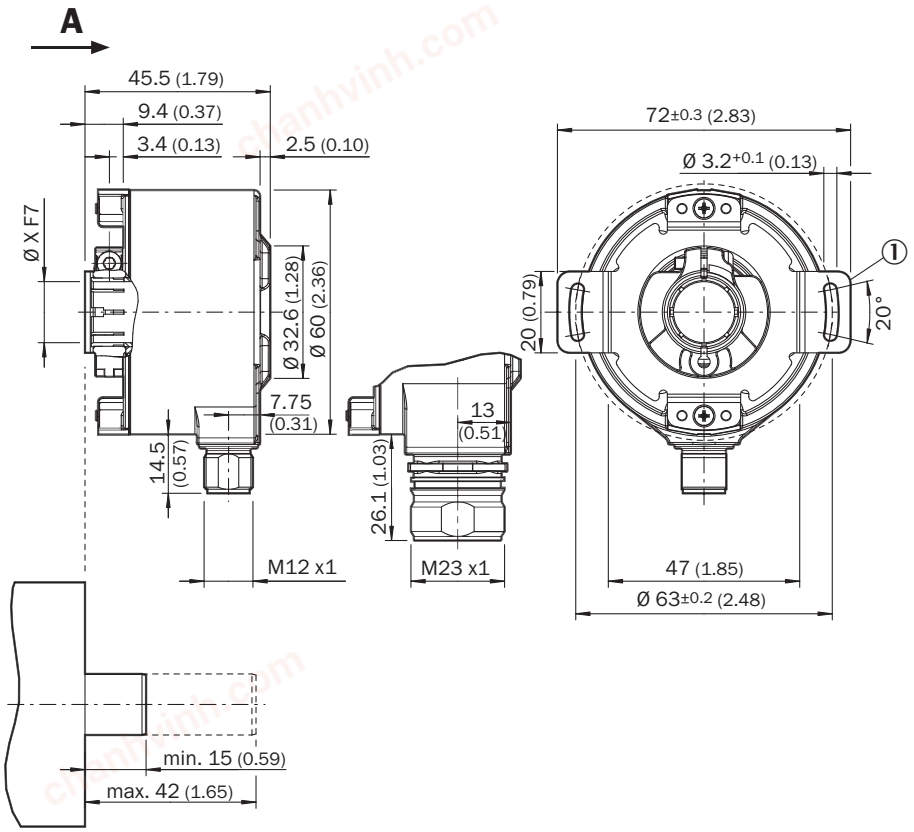

General tolerances according to DIN ISO 2768-mk

① Dimensional drawing of the stator coupling may differ depending on the variant. Please also refer to the dimensional drawing of the stator coupling.

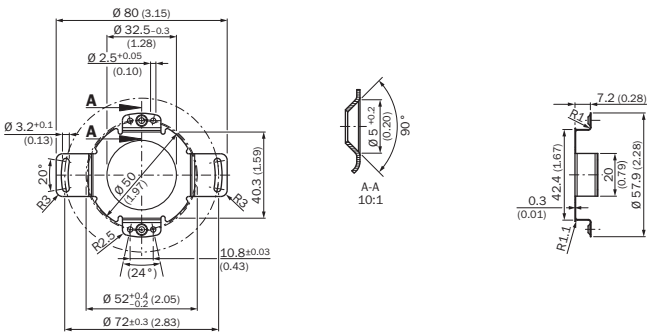

chanhvinh.com

Attachment specifications

Version 4

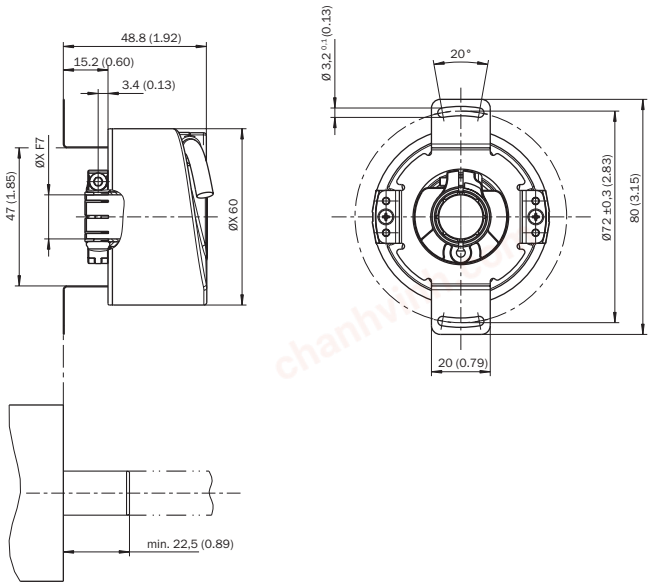

PIN assignment

View of the M12 male connector plug-in face

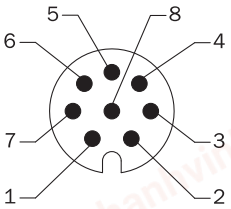

PIN	Signal	Explanation
1	REFSIN	Process data channel
2	+ SIN	Process data channel
3	REFCOS	Process data channel
4	+ COS	Process data channel
5	Data +	Parameter channel RS 485
6	Data -	Parameter channel RS 485
7	GND	Ground connection
8	U_S	Supply voltage
Housing	Screen	Screen connected to encoder housing

chanhvinh.com

Diagrams

Signal specification of the process channel

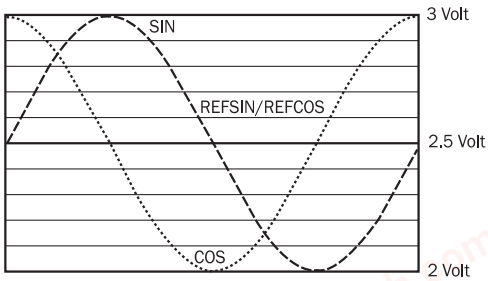

Signal diagram for clockwise rotation of the shaft looking in direction "A" (see dimensional drawing)1 period = 360 ° : 1024

Recommended accessories

Other models and accessories ➜ www.sick.com/SFS_SFM60

	Brief description	Type	Part no.
Programming and configuration tools			
	SVip® LAN programming tool for all motor feedback systems	PGT-11-S LAN	1057324
Flanges			
	One-sided stator coupling, slot, slot radius 33 mm to 48.5 mm, slot width 5.1 mm	BEF-DS01DFS/VFS	2047428
	One-sided stator coupling, slot, slot radius 32.25 mm to 141.75 mm, slot width 5.1 mm	BEF-DS02DFS/VFS	2047430
	One-sided stator coupling, slot, slot radius 33 mm to 211.9 mm, slot width 5.1 mm	BEF-DS03DFS/VFS	2047431
	Stator coupling, 16.5 mm high	BEF-DS05XFX	2057423
	Stator coupling with hole circle diameter Ø72 mm	BEF-DS07XFX	2059368

chanhvinh.com

SICK AT A GLANCE

SICK is one of the leading manufacturers of intelligent sensors and sensor solutions for industrial applications. A unique range of products and services creates the perfect basis for controlling processes securely and efficiently, protecting individuals from accidents and preventing damage to the environment.

We have extensive experience in a wide range of industries and understand their processes and requirements. With intelligent sensors, we can deliver exactly what our customers need. In application centers in Europe, Asia and North America, system solutions are tested and optimized in accordance with customer specifications. All this makes us a reliable supplier and development partner.

Comprehensive services complete our offering: SICK LifeTime Services provide support throughout the machine life cycle and ensure safety and productivity.

For us, that is "Sensor Intelligence."

WORLDWIDE PRESENCE:

Contacts and other locations –www.sick.com

SICK
Sensor Intelligence.