chanhvinh.com

Product data sheet



PFG08-P1CM03PP

EcoLine

WIRE DRAW ENCODERS

SICK
Sensor Intelligence.

chanhvinh.com

PFG08-P1CM03PP | EcoLine

WIRE DRAW ENCODERS

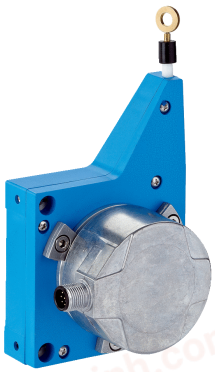

Illustration may differ

Ordering information

Type	Part no.
PFG08-P1CM03PP	1060984

Included in delivery: MRA-G080-103D3 (1), DFS60A-S1PC65536 (1)

Product is supplied fully assembled. See individual components for further technical data

Other models and accessories → www.sick.com/EcoLine

Detailed technical data

Performance

PFG

Measurement range	0 m ... 3 m
Encoder	Incremental encoders
Resolution (wire draw + encoder)	0.0035 mm [1) 2)]
Repeatability	≤ 0.2 mm [3)]
Linearity	≤ ± 2 mm [3)]
Hysteresis	≤ 0.4 mm [3)]

[1)] The values shown have been rounded.

[2)] Example calculation based on the PFG08 with HTL Push Pull: 230 mm (wire draw length per revolution - see Mechanical data): 16,384 (pulses per revolution) = 0.014 mm (resolution of wire draw + encoder combination).

[3)] Value applies to wire draw mechanism.

Interfaces

PFG

Communication interface	Incremental / TTL / HTL
Programmable/configurable	✓
Factory setting	Factory setting: output level TTL

Electrical data

PFG

Connection type	Male connector, M12, 8-pin, radial
Supply voltage	4.5 V ... 32 V
Power consumption	≤ 0.7 W (without load)
MTTFd: mean time to dangerous failure	300 years (EN ISO 13849-1) [1)]

[1)] This product is a standard product and does not constitute a safety component as defined in the Machinery Directive. Calculation based on nominal load of components, average ambient temperature 40 °C, frequency of use 8760 h/a. All electronic failures are considered hazardous. For more information, see document no. 8015532.

chanhvinh.com

Mechanical data

PFG

Weight	0.55 kg
Measuring wire material	Highly flexible stranded steel 1,4401 stainless steel V4A
Weight (measuring wire)	1.2 g/m
Housing material, wire draw mechanism	Plastic, Noryl
Spring return force	3.3 N ... 4.4 N [1]
Length of wire pulled out per revolution	230 mm
Life of wire draw mechanism	Typ. 1,000,000 cycles [2] [3]
Actual wire draw length	3.2 m
Wire acceleration	10 m/s²
Operating speed	6 m/s
Mounted encoder	DFS60, DFS60A-S1PC65536, 1036761
Mounted mechanic	MRA-G080-103D3, 5322778

[1] These values were measred at an ambient temperature of 25 °C. There may be variations at other temperatures.
[2] Average values, which depend on the application.
[3] The service life depends on the type of load. This is influenced by environmental conditions, the installation location, the measuring range in use, the traversing speed, and acceleration.

Ambient data

PFG

EMC	According to EN 61000-6-2 and EN 61000-6-3
Enclosure rating	IP50
Operating temperature range	–30 °C ... +70 °C

Classifications

eCl@ss 5.0	27270590
eCl@ss 5.1.4	27270590
eCl@ss 6.0	27270590
eCl@ss 6.2	27270590
eCl@ss 7.0	27270590
eCl@ss 8.0	27270590
eCl@ss 8.1	27270590
eCl@ss 9.0	27270590
eCl@ss 10.0	27270613
eCl@ss 11.0	27270503
eCl@ss 12.0	27270503
ETIM 5.0	EC001486
ETIM 6.0	EC001486
ETIM 7.0	EC001486
ETIM 8.0	EC001486
UNSPSC 16.0901	41112113

PFG08-P1CM03PP | EcoLine

WIRE DRAW ENCODERS

Dimensional drawing (Dimensions in mm (inch))

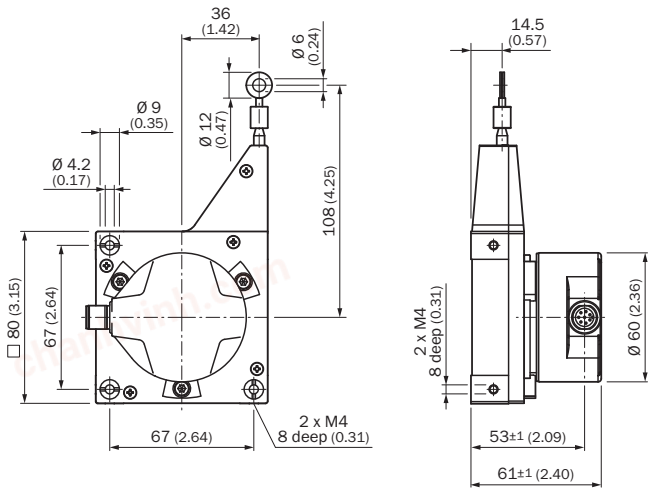

PIN assignment

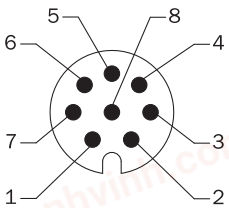

View of M12 male device connector on encoder

PIN Male connector M12, 8-pin	PIN Male connector M23, 12-pin	Wire colors (cable connection)	TTL/HTL signal	Sin/Cos 1.0 V_{PP}	Explanation
1	6	Brown	$\overline{A}$	COS-	Signal wire
2	5	White	A	COS+	Signal wire
3	1	Black	$\overline{B}$	SIN-	Signal wire
4	8	Pink	B	SIN+	Signal wire
5	4	Yellow	$\overline{Z}$	$\overline{Z}$	Signal wire
6	3	Purple	Z	Z	Signal wire
7	10	Blue	GND	GND	Ground connection
8	12	Red	$+U_S$	$+U_S$	Supply voltage
-	9	-	N.c.	N.c.	Not assigned
-	2	-	N.c.	N.c.	Not assigned
-	11	-	N.c.	N.c.	Not assigned
-	7 [1]	-	0-SET [1]	N.c.	Set zero pulse [1]
Screen	Screen	Screen	Screen	Screen	Screen connected to housing on encoder side. Connected to ground on control side.

[1]

chanhvinh.com

PIN Male connector M12, 8-pin	PIN Male connector M23, 12-pin	Wire colors (cable connection)	TTL/HTL signal	Sin/Cos 1.0 V_{PP}	Explanation
For electrical interfaces only: M, U, V, W with 0-SET function on PIN 7 on M23 plug. The 0-SET input is used to set the zero pulse to the current shaft position. If the 0-SET input is applied to US for longer than 250 ms after it has previously been open or applied to GND for at least 1,000 ms, the current shaft position is assigned zero pulse signal “Z”.					

Diagrams

Maximum revolution range

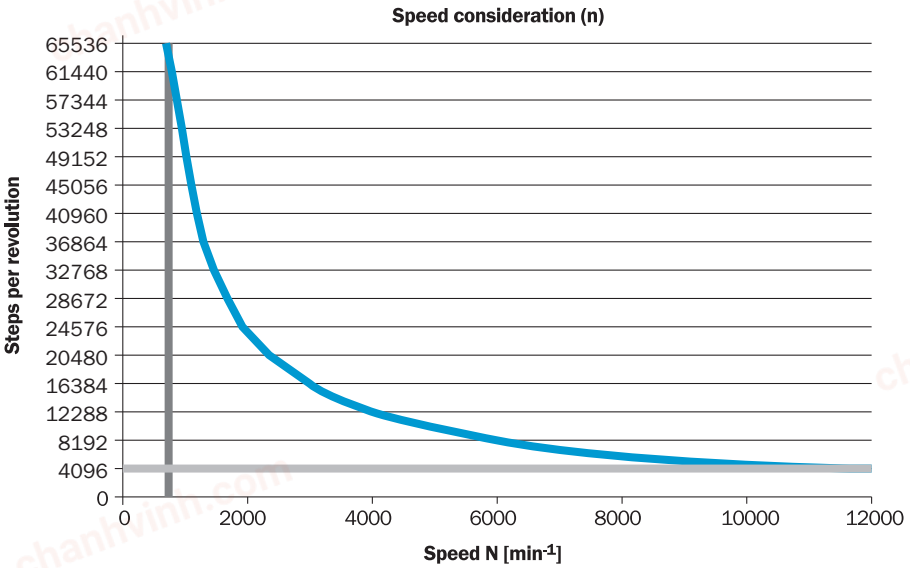

Recommended accessories

Other models and accessories ➜ www.sick.com/EcoLine

	Brief description	Type	Part no.
Programming and configuration tools			
	USB programming unit, for programmable SICK encoders AFS60, AFM60, DFS60, VFS60, DFV60 and wire draw encoders with programmable encoders	PGT-08-S	1036616
	Programming unit display for programmable SICK DFS60, DFV60, AFS/AFM60, AHS/AHM36 encoders, and wire draw encoder with DFS60, AFS/AFM60 and AHS/AHM36. Compact dimensions, low weight, and intuitive operation.	PGT-10-Pro	1072254
Wire draw mechanism			
	EcoLine wire draw mechanism for servo flange with 6 mm shaft, measuring range 0 m ... 3 m	MRA-G080-103D3	5322778
Plug connectors and cables			
	Head A: female connector, M12, 8-pin, straight Head B: Flying leads Cable: Incremental, SSI, PUR, halogen-free, shielded, 2 m	DOL-1208-G02MAC1	6032866

chanhvinh.com

PFG08-P1CM03PP | EcoLine

WIRE DRAW ENCODERS

	Brief description	Type	Part no.
	Head A: female connector, M12, 8-pin, straight Head B: Flying leads Cable: Incremental, SSI, PUR, halogen-free, shielded, 5 m	DOL-1208-G05MAC1	6032867
	Head A: female connector, M12, 8-pin, straight Head B: Flying leads Cable: Incremental, SSI, PUR, halogen-free, shielded, 10 m	DOL-1208-G10MAC1	6032868
	Head A: female connector, M12, 8-pin, straight Head B: Flying leads Cable: Incremental, SSI, PUR, halogen-free, shielded, 20 m	DOL-1208-G20MAC1	6032869
	Head A: female connector, M12, 8-pin, straight Head B: male connector, D-Sub, 9-pin, straight Cable: Incremental, shielded, 0.5 m Programming adapter cable for programming tool PGT-10-Pro and PGT-08-S	DSL-2D08-G0M5AC3	2046579
	Head A: female connector, M12, 8-pin, straight, A-coded Cable: Incremental, SSI, shielded	DOS-1208-GA01	6045001

chanhvinh.com

SICK AT A GLANCE

SICK is one of the leading manufacturers of intelligent sensors and sensor solutions for industrial applications. A unique range of products and services creates the perfect basis for controlling processes securely and efficiently, protecting individuals from accidents and preventing damage to the environment.

We have extensive experience in a wide range of industries and understand their processes and requirements. With intelligent sensors, we can deliver exactly what our customers need. In application centers in Europe, Asia and North America, system solutions are tested and optimized in accordance with customer specifications. All this makes us a reliable supplier and development partner.

Comprehensive services complete our offering: SICK LifeTime Services provide support throughout the machine life cycle and ensure safety and productivity.

For us, that is "Sensor Intelligence."

WORLDWIDE PRESENCE:

Contacts and other locations –www.sick.com

SICK
Sensor Intelligence.