chanhvinh.com

Product data sheet



PBT-RB400SG1SSNVMC0Z

PBT

PRESSURE SENSORS

SICK
Sensor Intelligence.

chanhvinh.com

PBT-RB400SG1SSNVMC0Z | PBT

PRESSURE SENSORS



Illustration may differ

Ordering information

Type	Part no.
PBT-RB400SG1SSNVMC0Z	6038658

Other models and accessories → www.sick.com/PBT

Detailed technical data

Features

Medium	Liquid, gaseous
Pressure type	Gauge pressure
Pressure unit	bar
Measuring range	0 bar ... 400 bar
Process temperature	0 °C ... +80 °C
Output signal	0 V ... 10 V, 3-wire
Specialty	Without

Mechanics/electronics

Process connection	G ¼ A according to DIN 3852-E
Wetted parts	Pressure Connection: stainless steel 316L Pressure sensor: stainless steel 316L (for measurement ranges from 0 bar ... 10 bar rel stainless steel 13-8 PH)
Internal transmission fluid	Silicone oil (only with pressure ranges < 0 bar ... 10 bar and ≤ 0 bar abs ... 25 bar abs)
Pressure port	, Standard
Housing material	Stainless steel
Connection type	Round connector M12 x 1, 4-pin, IP67
Supply voltage	8 V DC ... 30 V DC with output signal 4 mA ... 20 mA and 0 V ... 5 V 14 V DC ... 30 V DC with output signal 0 V ... 10 V 14 V DC ... 30 V DC [1)]
Power consumption	Signal current (max. 25 mA) for current output Max. 8 mA for voltage output signal
Electrical safety	Overvoltage protection: 32 V DC, 36 V DC with 4 mA ... 20 mA Short-circuit protection: Q_A towards M Reverse polarity protection: L^+ to M Protection class: III
Isolation voltage	500 V DC
CE-conformity	Pressure equipment directive: 2014/68/EU, EMC directive: 2014/30/EU, EN 61 326-2-3
Weight sensor	Approx. 80 g

[1)] The pressure transmitter must be supplied with power by a limited energy circuit compliant with 9.3 of UL/EN/IEC 601010-1 or LPS to UL/EN/IEC 60950-1 or Class 2 to UL 1310/UL1585 (NEC or CEC). The power supply must be suitable for operation above 2,000 m if the pressure transmitter is used above this altitude.

chanhvinh.com

Seal	NBR
Enclosure rating	IP67
Protection class III	✓
Reference conditions	Reference conditions: According to IEC 61298-1
MTTF	1,176 years

[1] The pressure transmitter must be supplied with power by a limited energy circuit compliant with 9.3 of UL/EN/IEC 601010-1 or LPS to UL/EN/IEC 60950-1 or Class 2 to UL 1310/UL1585 (NEC or CEC). The power supply must be suitable for operation above 2,000 m if the pressure transmitter is used above this altitude.

Performance

Non-linearity	≤ ± 0.5 %, (Best Fit Straight Line, BFSL) according to IEC 61298-2
Accuracy	≤ ± 1 % of the span
Adjustment accuracy of zero signal	≤ 0.5 % of span typ., ≤ 0.8 % of span max. (with non-linerarity 0.5 %)
Hysteresis	≤ 0.16 % of the span
Non-repeatability	≤ 0.1 % of the span
Response time	< 4 ms
Signal noise	≤ 0.3 % of the span
Long-term drift/one-year stability	≤ 0.1 % of span to IEC 61298-2
Rated temperature range	0 °C ... +80 °C
Service life	Minimum 100 Mio. life cycles

Ambient data

Ambient temperature	0 °C ... +80 °C
Storage temperature	–40 °C ... +70 °C
Relative humidity	45 % ... 75 %
Shock load	500 g according to IEC 60068-2-27 (mechanical shock)
Vibration load	10 g according to IEC 60068-2-6 (vibration under resonance) 20 g optional

Classifications

ECl@ss 5.0	27200614
ECl@ss 5.1.4	27200614
ECl@ss 6.0	27200614
ECl@ss 6.2	27200614
ECl@ss 7.0	27200614
ECl@ss 8.0	27200614
ECl@ss 8.1	27200614
ECl@ss 9.0	27200614
ECl@ss 10.0	27200614
ECl@ss 11.0	27200614
ETIM 5.0	EC011478
ETIM 6.0	EC011478
ETIM 7.0	EC011478
UNSPSC 16.0901	41112410

chanhvinh.com

PBT-RB400SG1SSNVMC0Z | PBT

PRESSURE SENSORS

Dimensional drawing (Dimensions in mm (inch))

G ¼ A DIN 3852-E

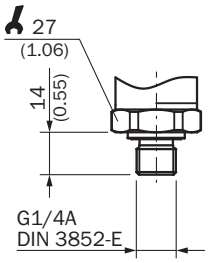

Housing with circular connector M12 x 1, IP67

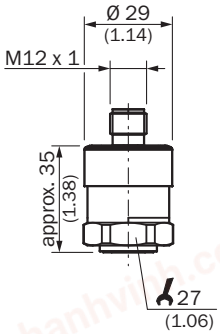

Connection type

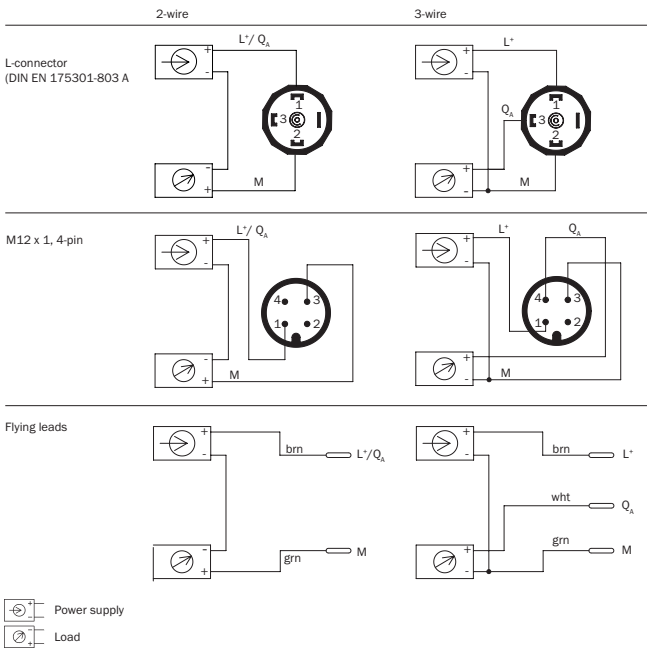

chanhvinh.com

Recommended accessories

Other models and accessories ➜ www.sick.com/PBT

	Brief description	Type	Part no.
Mounting brackets and plates			
	Mounting bracket for simple and stable wall mounting of pressure sensors with 27 mm hexagon, Aluminum	BEF-FL-ALUPBS-HLDR	5322501
Plug connectors and cables			
	Head A: female connector, M12, 4-pin, angled Head B: Flying leads Cable: PVC, unshielded, 5 m	DOL-1204-W05MD	6020399
	Head A: female connector, M12, 4-pin, straight, A-coded Head B: Flying leads Cable: Sensor/actuator cable, PUR, halogen-free, unshielded, 2 m	YF2A14-020UB3XLEAX	2095607
	Head A: female connector, M12, 4-pin, straight, A-coded Head B: Flying leads Cable: Sensor/actuator cable, PVC, unshielded, 2 m	YF2A14-020VB3XLEAX	2096234
	Head A: female connector, M12, 4-pin, straight, A-coded Head B: Flying leads Cable: Sensor/actuator cable, PVC, unshielded, 5 m	YF2A14-050VB3XLEAX	2096235
	Head A: female connector, M12, 4-pin, straight, A-coded Head B: Flying leads Cable: Sensor/actuator cable, PUR, halogen-free, unshielded, 10 m	YF2A14-100UB3XLEAX	2095609
	Head A: female connector, M12, 4-pin, straight, A-coded Head B: Flying leads Cable: Sensor/actuator cable, PVC, unshielded, 10 m	YF2A14-100VB3XLEAX	2096236
	Head A: female connector, M12, 4-pin, straight, A-coded Head B: Flying leads Cable: Sensor/actuator cable, PUR, halogen-free, unshielded, 15 m	YF2A14-150UB3XLEAX	2095610
	Head A: female connector, M12, 4-pin, straight, A-coded Head B: Flying leads Cable: Sensor/actuator cable, PVC, unshielded, 15 m	YF2A14-150VB3XLEAX	2096237
	Head A: female connector, M12, 4-pin, straight, A-coded Head B: Flying leads Cable: Sensor/actuator cable, PUR, halogen-free, unshielded, 20 m	YF2A14-200UB3XLEAX	2095611
	Head A: female connector, M12, 4-pin, straight, A-coded Head B: Flying leads Cable: Sensor/actuator cable, PVC, unshielded, 20 m	YF2A14-200VB3XLEAX	2096238
	Head A: female connector, M12, 4-pin, straight, A-coded Head B: Flying leads Cable: Sensor/actuator cable, PUR, halogen-free, unshielded, 25 m	YF2A14-250UB3XLEAX	2095615
	Head A: female connector, M12, 4-pin, angled, A-coded Head B: Flying leads Cable: Sensor/actuator cable, PUR, halogen-free, unshielded, 2 m	YG2A14-020UB3XLEAX	2095766
	Head A: female connector, M12, 4-pin, angled, A-coded Head B: Flying leads Cable: Sensor/actuator cable, PVC, unshielded, 2 m	YG2A14-020VB3XLEAX	2095895
	Head A: female connector, M12, 4-pin, angled, A-coded Head B: Flying leads Cable: Sensor/actuator cable, PUR, halogen-free, unshielded, 5 m	YG2A14-050UB3XLEAX	2095767

chanhvinh.com

PBT-RB400SG1SSNVMC0Z | PBT

PRESSURE SENSORS

	Brief description	Type	Part no.
	Head A: female connector, M12, 4-pin, angled, A-coded Head B: Flying leads Cable: Sensor/actuator cable, PVC, unshielded, 5 m	YG2A14-050VB3XLEAX	2095897
	Head A: female connector, M12, 4-pin, angled, A-coded Head B: Flying leads Cable: Sensor/actuator cable, PUR, halogen-free, unshielded, 10 m	YG2A14-100UB3XLEAX	2095768
	Head A: female connector, M12, 4-pin, angled, A-coded Head B: Flying leads Cable: Sensor/actuator cable, PVC, unshielded, 10 m	YG2A14-100VB3XLEAX	2095898
	Head A: female connector, M12, 4-pin, angled, A-coded Head B: Flying leads Cable: Sensor/actuator cable, PUR, halogen-free, unshielded, 15 m	YG2A14-150UB3XLEAX	2095769
	Head A: female connector, M12, 4-pin, angled, A-coded Head B: Flying leads Cable: Sensor/actuator cable, PVC, unshielded, 15 m	YG2A14-150VB3XLEAX	2096213
	Head A: female connector, M12, 4-pin, angled, A-coded Head B: Flying leads Cable: Sensor/actuator cable, PUR, halogen-free, unshielded, 20 m	YG2A14-200UB3XLEAX	2095770
	Head A: female connector, M12, 4-pin, angled, A-coded Head B: Flying leads Cable: Sensor/actuator cable, PVC, unshielded, 20 m	YG2A14-200VB3XLEAX	2096214
	Head A: female connector, M12, 4-pin, angled, A-coded Head B: Flying leads Cable: Sensor/actuator cable, PUR, halogen-free, unshielded, 25 m	YG2A14-250UB3XLEAX	2095771

chanhvinh.com

SICK AT A GLANCE

SICK is one of the leading manufacturers of intelligent sensors and sensor solutions for industrial applications. A unique range of products and services creates the perfect basis for controlling processes securely and efficiently, protecting individuals from accidents and preventing damage to the environment.

We have extensive experience in a wide range of industries and understand their processes and requirements. With intelligent sensors, we can deliver exactly what our customers need. In application centers in Europe, Asia and North America, system solutions are tested and optimized in accordance with customer specifications. All this makes us a reliable supplier and development partner.

Comprehensive services complete our offering: SICK LifeTime Services provide support throughout the machine life cycle and ensure safety and productivity.

For us, that is "Sensor Intelligence."

WORLDWIDE PRESENCE:

Contacts and other locations –www.sick.com