chanhvinh.com

Product data sheet




# PBS2-RB400SG1SSDLMA0Z

## PBS plus

**PRESSURE SENSORS**

SICK
Sensor Intelligence.

chanhvinh.com

# PBS2-RB400SG1SSDLMA0Z | PBS plus

PRESSURE SENSORS




Illustration may differ

## Ordering information

| Type | Part no. |
|---|---|
| PBS2-RB400SG1SSDLMA0Z | 6072945 |

Other models and accessories → www.sick.com/PBS_plus

## Detailed technical data

### Features

| | |
|---|---|
| **Medium** | Liquid, gaseous |
| **Pressure type** | Relative pressure |
| **Pressure unit** | bar |
| **Measuring range** | 0 bar ... 400 bar, 0 psi ... 5802 psi |
| **Process temperature** | –20 °C ... +85 °C |
| **Zero point adjustment** | Max. + 3 % of span |
| **Output signal** | IO-Link/PNP/NPN + PNP/NPN |
| **Rotatable housing** | Display against housing with electrical connection: 330 °<br>Housing against process connection: 320 ° |
| **Display** | 14-Segment LED, red, 4-digit, character height 9 mm, can be rotated electronically by 180°<br>Update: 1,000, 500, 200, 100 ms (adjustable) |

### Mechanics/electronics

| | |
|---|---|
| **Process connection** | G ¼ A according to DIN 3852-E |
| **Wetted parts** | Pressure connection: stainless steel 316L<br>Pressure sensor: stainless steel 316L (for measurement ranges from 0 bar ... 10 bar rel stainless steel 13-8 PH) |
| **Internal transmission fluid** | Silicone oil (only with pressure ranges < 0 bar ... 10 bar and ≤ 0 bar abs ... 25 bar abs) |
| **Pressure port** | 3.5 mm, Standard |
| **Housing material** | Lower body: stainless steel 304, Plastic head: PC + ABS, Buttons: TPE-E, Display window: PC |
| **Connection type** | Round connector M12 x 1, 4-pin, IP67 |
| **Supply voltage** | 15 V DC ... 35 V DC |
| **Power consumption** | 45 mA (for configurations without analog output signal)<br>70 mA (for configurations with analog output signal) |
| **Total current consumption** | Max. 600 mA (including switching current) |

chanhvinh.com



| | |
|---|---|
| **Electrical safety** | Protection class: III<br>Overvoltage protection: 40 V DC<br>Short-circuit protection: $Q_A$, $Q_1$, $Q_2$ towards M<br>Reverse polarity protection: $L^+$ to M |
| **Isolation voltage** | 500 V DC |
| **CE-conformity** | EMC Directive: 2014/30 / EU (EN 61326-1:2013; EN 61326-2-3:2013), Pressure equipment directive: 2014/68 / EU, Hazardous materials (RoHS): 2011/65 / EU (EN 50581:2012) |
| **Weight sensor** | Approx. 220 g |
| **Seal** | NBR seal installed, FPM/FKM seal included |
| **Enclosure rating** | IP67 / IP67 |
| **Protection class III** | ✓ |
| **MTTF** | > 100 years |

## Performance

| | |
|---|---|
| **Non-linearity** | ≤ ± 0.25 %, of span (Best Fit Straight Line, BFSL) according to IEC 61298-2 |
| **Accuracy** | ≤ ± 0.5 % of the span |
| **Setting accuracy of switching outputs** | ≤ ± 0.5 % of span |
| **Response time** | ≤ 5 ms |
| **Long-term drift/one-year stability** | ≤ ± 0.1 % of the span according to IEC 61298-2<br>≤ 0.2 % of the span According to IEC 61298-2 for measuring range ≤ 0.6 bar or flush-mounted membrane (0 psi ... 10 psi) |
| **Temperature coefficient in rated temperature range** | Average TC of the zero point: ≤± 0.16% of the span / 10 K, Average TC of the span ≤± 0.16% of the span / 10 K |
| **Rated temperature range** | 0 °C ... +80 °C |
| **Service life** | Minimum 100 Mio. life cycles |

## Ambient data

| | |
|---|---|
| **Ambient temperature** | –20 °C ... +80 °C |
| **Storage temperature** | –20 °C ... +70 °C |
| **Relative humidity** | ≤ 75 % |
| **Shock load** | 50 g, 6 ms according to IEC 60068-2-27 (mechanical shock) |
| **Vibration load** | 20 g, 10 Hz ... 2,000 Hz (IEC 60068-2-6, at resonance) |

## Classifications

| | |
|---|---|
| **ECl@ss 5.0** | 27200620 |
| **ECl@ss 5.1.4** | 27200620 |
| **ECl@ss 6.0** | 27200620 |
| **ECl@ss 6.2** | 27200620 |
| **ECl@ss 7.0** | 27200620 |
| **ECl@ss 8.0** | 27200620 |
| **ECl@ss 8.1** | 27200620 |
| **ECl@ss 9.0** | 27200620 |
| **ECl@ss 10.0** | 27200620 |
| **ECl@ss 11.0** | 27200620 |
| **ETIM 5.0** | EC000243 |
| **ETIM 6.0** | EC000243 |

chanhvinh.com

# PBS2-RB400SG1SSDLMA0Z | PBS plus

PRESSURE SENSORS

| | |
|---|---|
| **ETIM 7.0** | EC000243 |
| **UNSPSC 16.0901** | 41112409 |

## Dimensional drawing (Dimensions in mm (inch))

G ¼ A DIN 3852-E

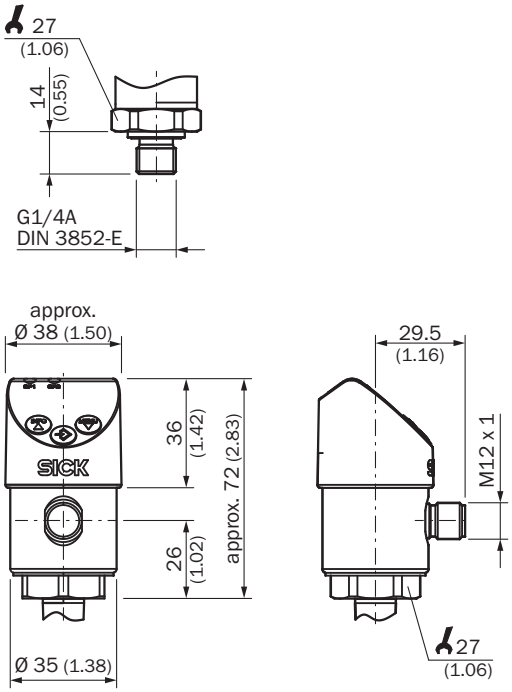


## Connection type

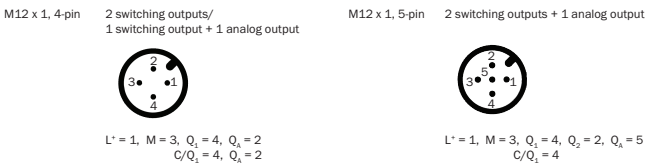


① $L^+$: Positive supply connection
② M: Negative supply connection
③ $Q_1$: Switching output 1
④ $C/Q_1$: With IO-Link: Communication/ switching output 1
⑤ $Q_2$: Switching output 2
⑥ $Q_A$: Analog output

chanhvinh.com



# SICK AT A GLANCE

SICK is one of the leading manufacturers of intelligent sensors and sensor solutions for industrial applications. A unique range of products and services creates the perfect basis for controlling processes securely and efficiently, protecting individuals from accidents and preventing damage to the environment.

We have extensive experience in a wide range of industries and understand their processes and requirements. With intelligent sensors, we can deliver exactly what our customers need. In application centers in Europe, Asia and North America, system solutions are tested and optimized in accordance with customer specifications. All this makes us a reliable supplier and development partner.

Comprehensive services complete our offering: SICK LifeTime Services provide support throughout the machine life cycle and ensure safety and productivity.

**For us, that is “Sensor Intelligence.”**

# WORLDWIDE PRESENCE:

Contacts and other locations –www.sick.com