chanhvinh.com

Product data sheet

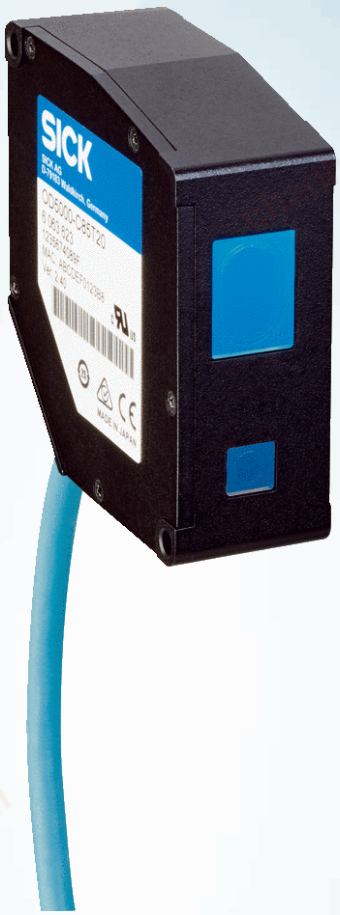

OD5000-C85W20

OD5000

DISPLACEMENT MEASUREMENT SENSORS

SICK
Sensor Intelligence.

chanhvinh.com

OD5000-C85W20 | OD5000

DISPLACEMENT MEASUREMENT SENSORS



Ordering information

Type	Part no.
OD5000-C85W20	6063624

Other models and accessories ➜ www.sick.com/OD5000

Detailed technical data

Mechanics/electronics

Supply voltage V_S	DC 12 V ... 24 V, ± 10%, including residual ripple
Power consumption	180 mA, at 24 V
Warm-up time	< 10 min
Housing material	Metal (Aluminum die cast)
Window material	Plastic (PMMA)
Connection type	Cable with male connector, M12, 8-pin, A-coded, 50 cm
Indication	Status LEDs
Weight	280 g
Dimensions (W x H x D)	25.9 mm x 71.5 mm x 53.2 mm
Enclosure rating	IP67
Protection class	III (EN 50178)

Safety-related parameters

$MTTF_D$	61 years
DC_{avg}	0%

Performance

Measurement range min ... max:	65 mm ... 105 mm [1]
Target	Natural objects
Repeatability	0.1 µm [2] [3]

[1] If there are reflections, the measuring range is reduced to 71.5 ... 91.5 mm.
[2] Measurement on 60 % remission (ceramic, white).
[3] Set average: 65536, median: 31, response time: 50 µs, constant application parameters.
[4] At 0.0125 ms, measurement is only possible within a sub-range.
[5] Dependent on the set average or sensitivity.
[6] At 80 kHz, measurement is only possible in a sub-area.
[7] Visible, wavelength: 655 nm, max. power: 0.39 mW.

chanhvinh.com

Linearity	Diffuse ± 6 µm [2] Specular ± 6 µm
Response time	≥ 12.5 µs [4] [5]
Measuring frequency	≤ 80 kHz [6]
Output time	≥ 0.0125 ms
Light source	Laser, red visible red light
Laser class	1 (IEC 60825-1:2014, EN 60825-1:2014) [7]
Typ. light spot size (distance)	70 µm x 2,000 µm
Special task	Thickness measurement of transparent material
Thickness measurement of transparent material	0.5 mm ... 2 mm

[1] If there are reflections, the measuring range is reduced to 71.5 ... 91.5 mm.
[2] Measurement on 60 % remission (ceramic, white).
[3] Set average: 65536, median: 31, response time: 50 µs, constant application parameters.
[4] At 0.0125 ms, measurement is only possible within a sub-range.
[5] Dependent on the set average or sensitivity.
[6] At 80 kHz, measurement is only possible in a sub-area.
[7] Visible, wavelength: 655 nm, max. power: 0.39 mW.

Interfaces

Ethernet	✓, TCP/IP, UDP
Digital input	In_1 Can be used as laser off, external teach-in, or deactivated
Digital output	
Number	1 ... 3 [1]
Type	PNP/NPN, selectable
Analog output	
Number	1
Type	Current output
Function	Optional over evaluation unit AOD1
Current	4 mA ... 20 mA, ≤ 300 Ω

[1] Optional over evaluation unit AOD1.

Ambient data

Ambient temperature, operation	–10 °C ... +50 °C, Operating temperature at V_S = 24 V
Ambient temperature, storage	–20 °C ... +60 °C
Relative air humidity (non-condensing)	35 % ... 85 %
Temperature drift	± 0.01 % FS/K at –10 °C ... +40 °C (FS = Full Scale = sensor measuring range) ± 0.03 % FS/K at +40 °C ... +50 °C (FS = Full Scale = sensor measuring range)
Typ. Ambient light immunity	Artificial light: ≤ 3,000 lx [1] Sunlight: ≤ 10,000 lx
Vibration resistance	EN 60068-2-6, EN 60068-2-64
Shock resistance	EN 60068-2-27

[1] With constant object movement in the measuring range.

chanhvinh.com

Classifications

eCl@ss 5.0	27270801
eCl@ss 5.1.4	27270801
eCl@ss 6.0	27270801
eCl@ss 6.2	27270801
eCl@ss 7.0	27270801
eCl@ss 8.0	27270801
eCl@ss 8.1	27270801
eCl@ss 9.0	27270801
eCl@ss 10.0	27270801
eCl@ss 11.0	27270801
eCl@ss 12.0	27270916
ETIM 5.0	EC001825
ETIM 6.0	EC001825
ETIM 7.0	EC001825
ETIM 8.0	EC001825
UNSPSC 16.0901	41111613

Dimensional drawing (Dimensions in mm (inch))

OD5000-C85x20

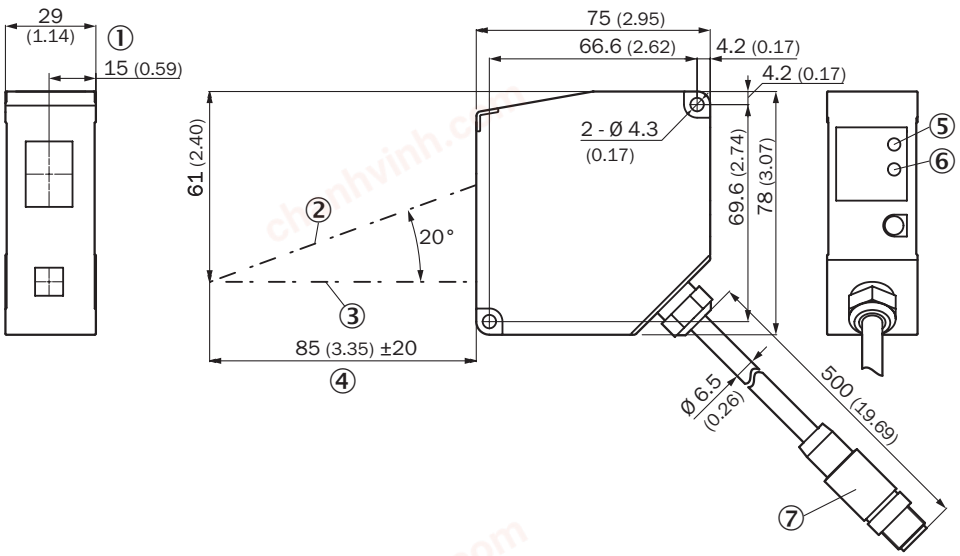

① Reference edge
② Optical axis, receiver
③ Optical axis, sender
④ Measuring range
⑤ Link LED
⑥ Status LED
⑦ Male connector M12, 8-pin

chanhvinh.com

Connection diagram

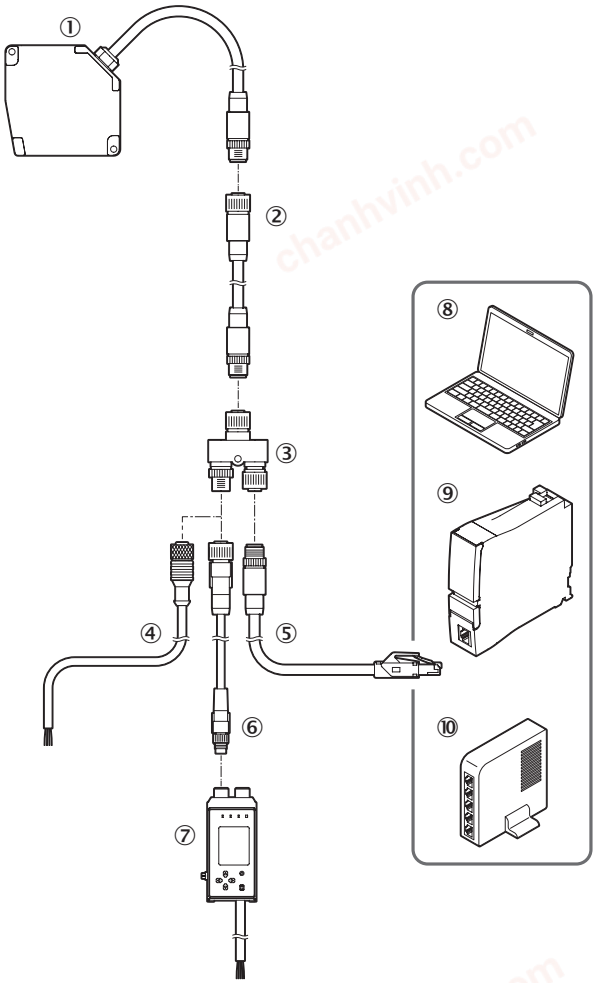

① OD5000
② Sensor head extension cable
③ Y-distribution (included with delivery)
④ Cable with open ends
⑤ Ethernet Connection cable
⑥ AOD1 connection cable, M12, 4-pin to M8, 4-pin
⑦ AOD1
⑧ PC
⑨ PLC
⑩ switch

PIN assignment

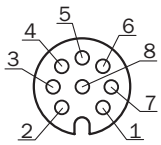

Female connector M12, 8-pin, A-coded

chanhvinh.com

① Input (MF) / RS485+
② 0 V
③ 24 V
④ TxD-
⑤ RxD+
⑥ TxD+
⑦ Input (MF) / RS485-
⑧ RxD-

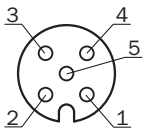

Female connector M12, 5-pin, D-coded
① TxD+
② RxD+
③ TxD-
④ RxD-
⑤ nc

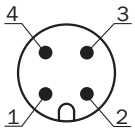

Connector M12, 4-pin, A-coded
① 24 V
② Input (MF) / RS485+
③ 0 V
④ Input (MF) / RS485-

Y-junctions

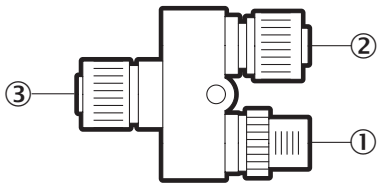

Y-distribution connections
① M12, 4-pin, A-coded
② M12, 5-pin, D-coded
③ M12, 8-pin, A-coded

Light spot size

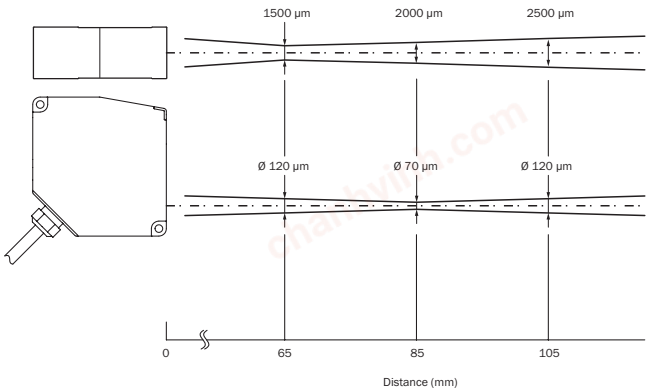

chanhvinh.com

Linearity

OD5000-C85W20 (reflective)

Linearity µm (µin)

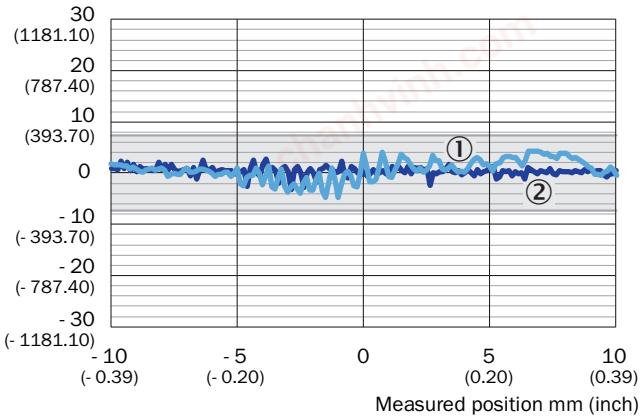

① Mirror
② Glass

OD5000-C85W20 (diffuse)

Linearity (µm)

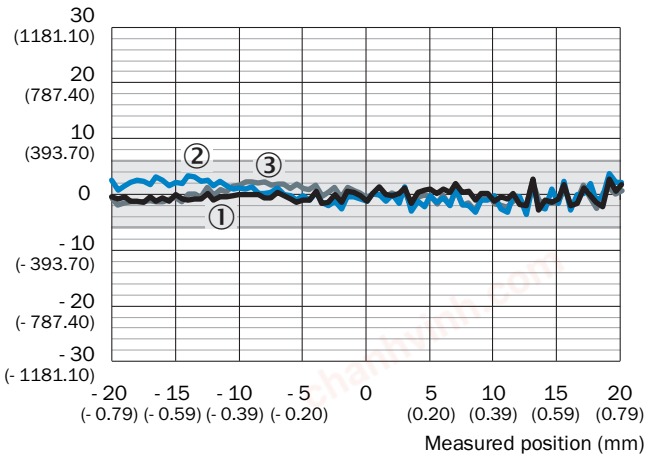

① White, 60% remission
② Black, 9.5% remission
③ Stainless steel

chanhvinh.com

Recommended accessories

Other models and accessories ➜ www.sick.com/OD5000

	Brief description	Type	Part no.
Evaluation units			
	OD Mini evaluation unit, master, 1 x Q, M8 male connector, 4-pin	AOD1-MR24Q1	6054270
	OD Mini evaluation unit, master, 2 x Q, M12 male connector, 5-pin	AOD1-MR25Q2	6054272
	OD Mini evaluation unit, OD5000 and OL1, master, 3 x Q, 1 x analog, open end cable, 2 m	AOD1-MR27C4	6058195
	OD Mini evaluation unit, slave, 1 x Q, M8 male connector, 4-pin	AOD1-SR24Q1	6054271
	OD Mini evaluation unit, slave, 2 x Q, M12 male connector, 5-pin	AOD1-SR25Q2	6054273
	OD Mini evaluation unit, OD5000 and OL1, slave, 3 x Q, 1 x analog, open end cable, 2 m	AOD1-SR27C4	6058196
Plug connectors and cables			
	Head A: female connector, M12, 4-pin, straight, A-coded Head B: Flying leads Cable: Sensor/actuator cable, PUR, halogen-free, unshielded, 2 m	YF2A14-020UB3XLEAX	2095607
	Head A: female connector, M12, 8-pin, straight Head B: male connector, M12, 8-pin, straight Cable: PUR, 2 m	DSC-1208-G02MA	6064004
	Head A: male connector, M12, 4-pin, straight, D-coded Head B: male connector, RJ45, 4-pin, straight Cable: Ethernet, PROFINET, PUR, halogen-free, shielded, 2 m	YM2D24-020PN1MRJA4	2106182

Recommended services

Additional services ➜ www.sick.com/OD5000

	Type	Part no.
Commissioning		
• **Product area:** Displacement measurement sensors • **Range of services:** Inspection of connection and mounting, optimization of parameters of SICK product as well as tests, set-up of previously defined functions of the scaling of the analog measuring range, switching point position, hysteresis, measuring frequency, measured value filter, signal quality, evaluation function, or communication interface • **Travel expenses:** The prices do not include travel costs such as hotel, flight, travel time and expenses. • **Duration:** Additional work will be invoiced separately	DT20 Hi/OD/OL commissioning	1612241
Extended warranty		
• **Product area:** Identification solutions, machine vision, Distance sensors, Detection and ranging solutions • **Range of services:** The services correspond to the scope of the statutory manufacturer warranty (SICK general terms of delivery). • **Duration:** Five-year warranty from delivery date.	Extended warranty for a total of five years from delivery date	1680671

chanhvinh.com

SICK AT A GLANCE

SICK is one of the leading manufacturers of intelligent sensors and sensor solutions for industrial applications. A unique range of products and services creates the perfect basis for controlling processes securely and efficiently, protecting individuals from accidents and preventing damage to the environment.

We have extensive experience in a wide range of industries and understand their processes and requirements. With intelligent sensors, we can deliver exactly what our customers need. In application centers in Europe, Asia and North America, system solutions are tested and optimized in accordance with customer specifications. All this makes us a reliable supplier and development partner.

Comprehensive services complete our offering: SICK LifeTime Services provide support throughout the machine life cycle and ensure safety and productivity.

For us, that is "Sensor Intelligence."

WORLDWIDE PRESENCE:

Contacts and other locations –www.sick.com