chanhvinh.com

Product data sheet



OD2-N50W10A2

OD Value

DISPLACEMENT MEASUREMENT SENSORS

SICK
Sensor Intelligence.

chanhvinh.com

OD2-N50W10A2 | OD Value

DISPLACEMENT MEASUREMENT SENSORS



Illustration may differ

Ordering information

Type	Part no.
OD2-N50W10A2	6036587

Other models and accessories → www.sick.com/OD_Value

Detailed technical data

Mechanics/electronics

Supply voltage V_s	DC 12 V ... 24 V
Power consumption	≤ 2.88 W [1]
Warm-up time	≤ 30 min
Housing material	Plastic (PBT)
Window material	Plastic (PMMA)
Connection type	Cable, 2 m
Indication	Distance bar graph, up to 8 status LEDs
Weight	70 g
Dimensions (W x H x D)	20.4 mm x 60 mm x 50 mm
Enclosure rating	IP67
Protection class	III

[1] Without load, with current output.

Safety-related parameters

$MTTF_D$	101 years
DC_{avg}	0%

Performance

Measurement range min ... max:	40 mm ... 60 mm [1]
Target	Natural objects

[1] 6% ... 90% remission factor.
[2] Measurement on 90 % remission (ceramic, white).
[3] At averaging function medium.
[4] Constant ambient conditions.
[5] When calibrated in the application regularly.
[6] Wavelength: 655 nm, max. output: 1 mW.

chanhvinh.com

Repeatability	5 µm [2) 3) 4)]
Linearity	± 20 µm [2) 3) 5)]
Response time	≥ 1 ms
Measuring frequency	≤ 2 kHz [1)]
Output time	≥ 0.5 ms
Light source	Laser, red visible red light
Laser class	2 (IEC 60825-1:2014, EN 60825-1:2014) [6)]
Typ. light spot size (distance)	0.5 mm x 1 mm (50 mm)
Additional function	Mean-value setting 1 ... 64x, automatic sensitivity adjustment, Teach-in of digital output, Invertable switching output, multifunctional input: laser-off / external teach-in / trigger, switching mode: distance to object (Dt0), switching mode: window (Wnd)

[1)] 6% ... 90% remission factor.
[2)] Measurement on 90 % remission (ceramic, white).
[3)] At averaging function medium.
[4)] Constant ambient conditions.
[5)] When calibrated in the application regularly.
[6)] Wavelength: 655 nm, max. output: 1 mW.

Interfaces

Serial	✓, RS-422
Digital output	
Number	1 [1)]
Type	NPN
Maximum output current I_A	≤ 100 mA
Multifunctional input (MF)	1 x MF [2)]

[1)] PNP: HIGH = V_S - (< 2 V) / LOW = < 2 V; NPN: HIGH = < 2 V / LOW = V_S.
[2)] MF can be used as laser-off, trigger, external teach-in, or deactivated; response time ≤ 3 ms.

Ambient data

Ambient temperature, operation	–10 °C ... +40 °C
Ambient temperature, storage	–20 °C ... +60 °C
Relative air humidity (non-condensing)	35 % ... 95 %
Temperature drift	± 0.08 % FS/K (FS = Full Scale = Measuring range of sensor)
Typ. Ambient light immunity	Artificial light: ≤ 3,000 lx Sunlight: ≤ 10,000 lx
Vibration resistance	10 Hz ... 55 Hz (amplitude 1.5 mm, x-, y-, z-axis 2 hours each)
Shock resistance	50 G (x, y, z axis 3 times each)

Classifications

eCl@ss 5.0	27270801
eCl@ss 5.1.4	27270801
eCl@ss 6.0	27270801
eCl@ss 6.2	27270801
eCl@ss 7.0	27270801
eCl@ss 8.0	27270801

eCl@ss 8.1	27270801
eCl@ss 9.0	27270801
eCl@ss 10.0	27270801
eCl@ss 11.0	27270801
eCl@ss 12.0	27270916
ETIM 5.0	EC001825
ETIM 6.0	EC001825
ETIM 7.0	EC001825
ETIM 8.0	EC001825
UNSPSC 16.0901	41111613

Dimensional drawing (Dimensions in mm (inch))

OD2-x50W10xx

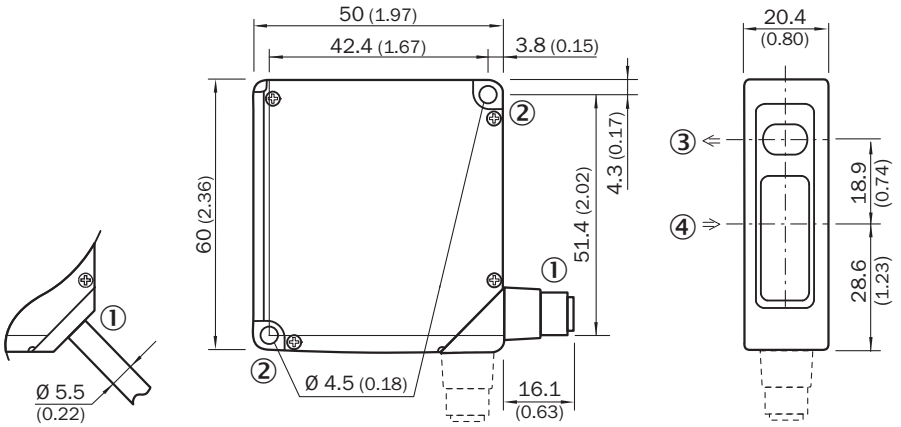

① 2 m cable or M12 connector; 90° rotatable
② Mounting hole, Ø 4.5 mm
③ Optical axis, sender
④ Optical axis, receiver

Connection type

OD2-xxxxxxA2 OD2-xxxxxxC2 OD2-xxxxxxI2 OD2-xxxxxxU2 cable

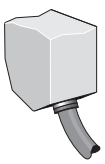

chanhvinh.com

Connection diagram

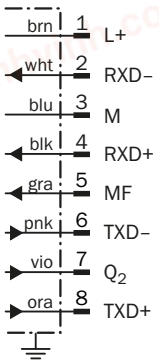

① Multifunctional input (MF)

Adjustment possible

OD2-xxxxxxAx

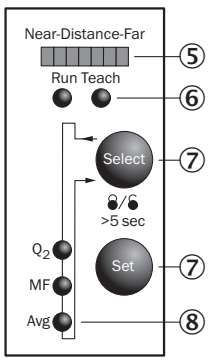

⑤ Distance indicator
⑥ Mode indicator (Run/Teach)
⑦ Control elements
⑧ Status indicator in- and outputs (Run-mode)/menu indicator (Teach-mode)

Light spot size

OD2-x50W10xx

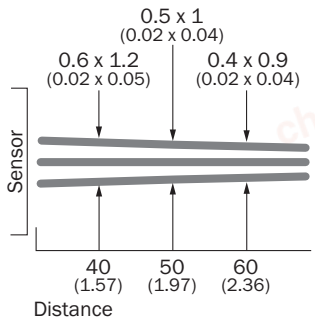

All dimensions in mm (inch)

chanhvinh.com

Linearity

OD2-x50xxxxx

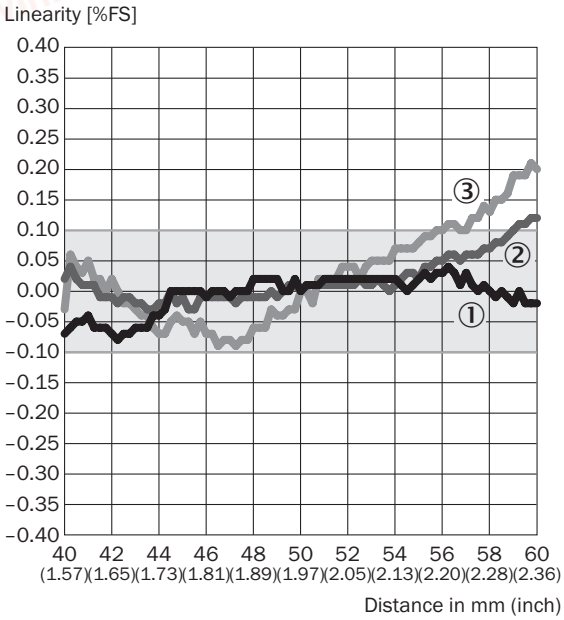

① White ceramic
② Black paper
③ Stainless steel

Recommended accessories

Other models and accessories ➜ www.sick.com/OD_Value

	Brief description	Type	Part no.
Mounting brackets and plates			
	Stainless-steel mounting bracket, stainless steel	BEF-WN-OD1000	4089813
Plug connectors and cables			
	Head A: female connector, M12, 8-pin, straight Head B: Flying leads Cable: Sensor/actuator cable, special color code, PVC, shielded, 2 m	DOL-1208-G02MF	6020663

chanhvinh.com

Recommended services

Additional services ➜ www.sick.com/OD_Value

	Type	Part no.
Commissioning		
• **Product area:** Displacement measurement sensors • **Range of services:** Inspection of connection and mounting, optimization of parameters of SICK product as well as tests, set-up of previously defined functions of the scaling of the analog measuring range, switching point position, hysteresis, measuring frequency, measured value filter, signal quality, evaluation function, or communication interface • **Travel expenses:** The prices do not include travel costs such as hotel, flight, travel time and expenses. • **Duration:** Additional work will be invoiced separately	DT20 Hi/OD/OL commissioning	1612241
Extended warranty		
• **Product area:** Identification solutions, machine vision, Distance sensors, Detection and ranging solutions • **Range of services:** The services correspond to the scope of the statutory manufacturer warranty (SICK general terms of delivery). • **Duration:** Five-year warranty from delivery date.	Extended warranty for a total of five years from delivery date	1680671

chanhvinh.com

SICK AT A GLANCE

SICK is one of the leading manufacturers of intelligent sensors and sensor solutions for industrial applications. A unique range of products and services creates the perfect basis for controlling processes securely and efficiently, protecting individuals from accidents and preventing damage to the environment.

We have extensive experience in a wide range of industries and understand their processes and requirements. With intelligent sensors, we can deliver exactly what our customers need. In application centers in Europe, Asia and North America, system solutions are tested and optimized in accordance with customer specifications. All this makes us a reliable supplier and development partner.

Comprehensive services complete our offering: SICK LifeTime Services provide support throughout the machine life cycle and ensure safety and productivity.

For us, that is "Sensor Intelligence."

WORLDWIDE PRESENCE:

Contacts and other locations –www.sick.com