chanhvinh.com

Product data sheet



MRA-G055-101D4

SICK
Sensor Intelligence.

MRA-G055-101D4



Ordering information

Type	Part no.
MRA-G055-101D4	5324019

Other models and accessories → www.sick.com/

Detailed technical data

Technical specifications

Accessory group	Wire draw mechanism
Description	EcoLine wire draw mechanism for servo flange with 6 mm shaft, measuring range 0 m ... 1.25 m
Items supplied	Without encoder
Measurement range	0 m ... 1.25 m
Reproducibility	≤ 0.2 mm
Linearity	≤ ± 2 mm
Hysteresis	≤ 0.4 mm
Weight	80 g (Wire draw mechanism)
Weight (measuring wire)	0.58 g/m
Measuring wire material	Highly flexible stranded steel 1,4401 stainless steel V4A/PA 12-sheathed
Housing material	Plastic, Noryl
Housing material, wire draw mechanism	Plastic, Noryl
Length of wire pulled out per revolution	150 mm
Actual wire draw length	1.45 m
Spring return force	1 N ... 1.4 N [1]
Measuring wire diameter	0.45 mm
Wire acceleration	10 m/s²
Operating speed	6 m/s
Resolution	To calculate the resolution of the system please use following formula:length of wire draw per revolution / steps per revolution = resolution of the combination of wire draw + encoder
Ambient operating temperature	–30 °C ... +70 °C
Enclosure rating mechanic	IP50
Life of wire draw mechanism	Typ. 1,000,000 cycles [2] [3]

[1] These values were measred at an ambient temperature of 25 °C. There may be variations at other temperatures.

[2] Average values, which depend on the application.

[3] The service life depends on the type of load. This is influenced by environmental conditions, the installation location, the measuring range in use, the traversing speed, and acceleration.

chanhvinh.com

Classifications

ECl@ss 5.0	27270591
ECl@ss 5.1.4	27270591
ECl@ss 6.0	27279103
ECl@ss 6.2	27279103
ECl@ss 7.0	27279103
ECl@ss 8.0	27279103
ECl@ss 8.1	27279103
ECl@ss 9.0	27270591
ECl@ss 10.0	27270591
ECl@ss 11.0	27270591
ECl@ss 12.0	27270591
ETIM 5.0	EC002026
ETIM 6.0	EC002026
ETIM 7.0	EC002026
ETIM 8.0	EC002026
UNSPSC 16.0901	39122221

Dimensional drawing (Dimensions in mm (inch))

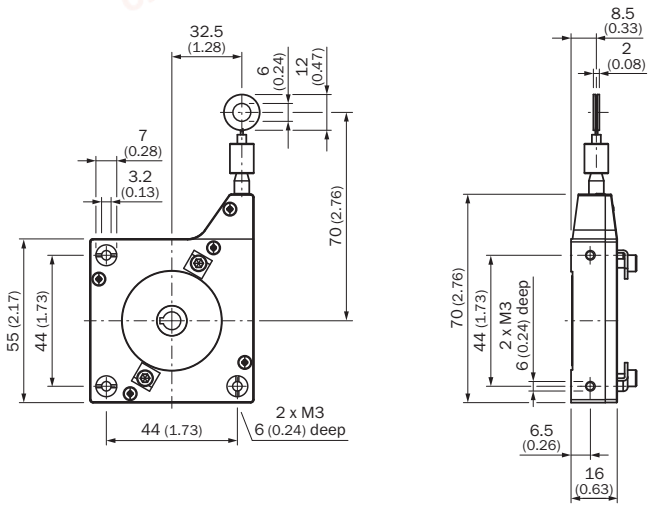

chanhvinh.com

SICK AT A GLANCE

SICK is one of the leading manufacturers of intelligent sensors and sensor solutions for industrial applications. A unique range of products and services creates the perfect basis for controlling processes securely and efficiently, protecting individuals from accidents and preventing damage to the environment.

We have extensive experience in a wide range of industries and understand their processes and requirements. With intelligent sensors, we can deliver exactly what our customers need. In application centers in Europe, Asia and North America, system solutions are tested and optimized in accordance with customer specifications. All this makes us a reliable supplier and development partner.

Comprehensive services complete our offering: SICK LifeTime Services provide support throughout the machine life cycle and ensure safety and productivity.

For us, that is "Sensor Intelligence."

WORLDWIDE PRESENCE:

Contacts and other locations –www.sick.com