chanhvinh.com

Product data sheet



IME18-05BPSZW2S

IME

INDUCTIVE PROXIMITY SENSORS

SICK
Sensor Intelligence.

chanhvinh.com

IME18-05BPSZW2S | IME

INDUCTIVE PROXIMITY SENSORS



Ordering information

Type	Part no.
IME18-05BPSZW2S	1040936

Included in delivery: BEF-MU-M18 (1)

Other models and accessories ➜ www.sick.com/IME

Detailed technical data

Features

Housing	Cylindrical thread design
Housing	Standard
Thread size	M18 x 1
Diameter	Ø 18 mm
Sensing range S_n	5 mm
Safe sensing range S_a	4.05 mm
Installation type	Flush
Switching frequency	1,000 Hz
Connection type	Cable, 3-wire, 2 m
Switching output	PNP
Output function	NO
Electrical wiring	DC 3-wire
Enclosure rating	IP67 [1]

[1] According to EN 60529.

Mechanics/electronics

Supply voltage	10 V DC ... 30 V DC
Ripple	≤ 10 %
Voltage drop	≤ 2 V [1]
Time delay before availability	≤ 100 ms
Hysteresis	5 % ... 15 %
Reproducibility	≤ 2 % [2] [3]
Temperature drift (of S_r)	± 10 %
EMC	According to EN 60947-5-2

[1] At I_a max.

[2] Ub and Ta constant.

[3] Of Sr.

chanhvinh.com

Continuous current I_a	≤ 200 mA
Cable material	PVC
Conductor size	0.25 mm²
Cable diameter	Ø 3.9 mm
Short-circuit protection	✓
Reverse polarity protection	✓
Power-up pulse protection	✓
Shock and vibration resistance	30 g, 11 ms/10 Hz ... 55 Hz, 1 mm
Ambient operating temperature	–25 °C ... +75 °C
Housing material	Brass, nickel-plated
Sensing face material	Plastic, PA 66
Housing length	67 mm
Thread length	52 mm
Tightening torque, max.	≤ 40 Nm
Items supplied	Mounting nut, brass, nickel-plated (2x)
UL File No.	NRKH.E181493

[1] At I_a max.
[2] Ub and Ta constant.
[3] Of Sr.

Safety-related parameters

$MTTF_D$	1,735 years
DC_{avg}	0 %

Reduction factors

Note	The values are reference values which may vary
St37 steel (Fe)	1
Stainless steel (V2A, 304)	Approx. 0.8
Aluminum (Al)	Approx. 0.45
Copper (Cu)	Approx. 0.4
Brass (Br)	Approx. 0.4

Installation note

Remark	Associated graphic see "Installation"
B	18 mm
C	18 mm
D	15 mm
F	40 mm

Classifications

ECl@ss 5.0	27270101
ECl@ss 5.1.4	27270101
ECl@ss 6.0	27270101
ECl@ss 6.2	27270101
ECl@ss 7.0	27270101

chanhvinh.com

ECl@ss 8.0	27270101
ECl@ss 8.1	27270101
ECl@ss 9.0	27270101
ECl@ss 10.0	27270101
ECl@ss 11.0	27270101
ETIM 5.0	EC002714
ETIM 6.0	EC002714
ETIM 7.0	EC002714
ETIM 8.0	EC002714
UNSPSC 16.0901	39122230

Installation note

Flush installation

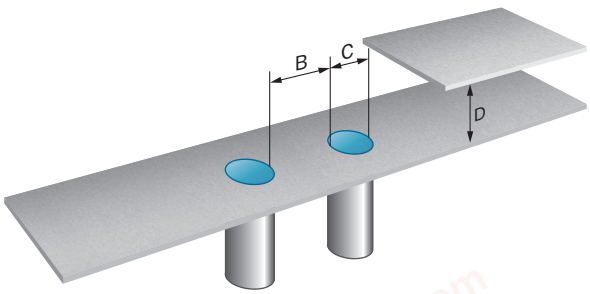

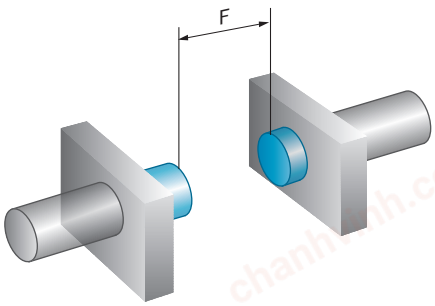

Connection diagram

Cd-001

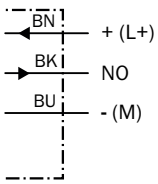

Subject to change without notice

chanhvinh.com

Dimensional drawing (Dimensions in mm (inch))

IME18 standard, cable, flush

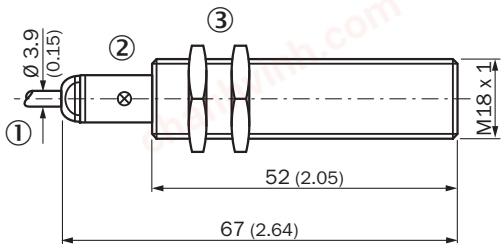

① Connection
② Display LED
③ Fastening nuts (2x); width across 24, metal

Recommended accessories

Other models and accessories ➜ www.sick.com/IME

	Brief description	Type	Part no.
Mounting brackets and plates			
	Mounting plate for M18 sensors, steel, zinc coated, without mounting hardware	BEF-WG-M18	5321870
	Mounting bracket for M18 sensors, steel, zinc coated, without mounting hardware	BEF-WN-M18	5308446
Terminal and alignment brackets			
	Clamping block for round sensors M18, without fixed stop, plastic (PA12), glass-fiber reinforced, mounting hardware included	BEF-KH-M18	2051481
	Clamping block for round sensors M18, with fixed stop, plastic (PA12), glass-fiber reinforced, mounting hardware included	BEF-KHF-M18	2051482

chanhvinh.com

SICK AT A GLANCE

SICK is one of the leading manufacturers of intelligent sensors and sensor solutions for industrial applications. A unique range of products and services creates the perfect basis for controlling processes securely and efficiently, protecting individuals from accidents and preventing damage to the environment.

We have extensive experience in a wide range of industries and understand their processes and requirements. With intelligent sensors, we can deliver exactly what our customers need. In application centers in Europe, Asia and North America, system solutions are tested and optimized in accordance with customer specifications. All this makes us a reliable supplier and development partner.

Comprehensive services complete our offering: SICK LifeTime Services provide support throughout the machine life cycle and ensure safety and productivity.

For us, that is "Sensor Intelligence."

WORLDWIDE PRESENCE:

Contacts and other locations –www.sick.com