chanhvinh.com

Product data sheet



# IME12-08NPSZWDSS61

## IME

**INDUCTIVE PROXIMITY SENSORS**

SICK
Sensor Intelligence.

chanhvinh.com

# IME12-08NPSZWDSS61 | IME

INDUCTIVE PROXIMITY SENSORS



Illustration may differ

## Ordering information

| Type | Part no. |
|---|---|
| IME12-08NPSZWDSS61 | 1101193 |

**Included in delivery:** BEF-MU-M12 (1)

Other models and accessories ➜ www.sick.com/IME

## Detailed technical data

### Features

| | |
|---|---|
| **Housing** | Cylindrical thread design |
| **Housing** | Standard design |
| **Thread size** | M12 x 1 |
| **Diameter** | Ø 12 mm |
| **Sensing range $S_n$** | 8 mm |
| **Safe sensing range $S_a$** | 6.48 mm |
| **Installation type** | Non-flush |
| **Switching frequency** | 2,000 Hz |
| **Connection type** | Cable with MOLEX-connector 43020-0409, 0.1 m |
| **Switching output** | PNP |
| **Output function** | NO |
| **Electrical wiring** | DC 3-wire |
| **Enclosure rating** | IP67 [1] |
| **Special characteristic** | Extended operating temperature |
| **Items supplied** | Mounting nut, brass, nickel-plated (2x) |

[1] According to EN 60529.

### Mechanics/electronics

| | |
|---|---|
| **Supply voltage** | 10 V DC ... 30 V DC |
| **Ripple** | ≤ 10 % |
| **Voltage drop** | ≤ 2 V [1] |
| **Time delay before availability** | ≤ 100 ms |

[1] At $I_a$ max.

[2] Ub and Ta constant.

[3] Of Sr.

chanhvinh.com



| | |
|---|---|
| **Hysteresis** | 5 % ... 15 % |
| **Reproducibility** | ≤ 2 % [2) 3)] |
| **Temperature drift (of $S_r$)** | ± 10 % |
| **EMC** | According to EN 60947-5-2 |
| **Continuous current $I_a$** | ≤ 200 mA |
| **No load current** | ≤ 10 mA |
| **Cable material** | PVC |
| **Conductor size** | 0.25 mm² |
| **Cable diameter** | Ø 3.9 mm |
| **Short-circuit protection** | ✓ |
| **Reverse polarity protection** | ✓ |
| **Power-up pulse protection** | ✓ |
| **Shock and vibration resistance** | 30 g, 11 ms/10 Hz ... 55 Hz, 1 mm |
| **Ambient operating temperature** | –30 °C ... +75 °C |
| **Housing material** | Brass, nickel-plated |
| **Sensing face material** | Plastic, PA 66 |
| **Housing length** | 63 mm |
| **Thread length** | 43 mm |
| **Tightening torque, max.** | ≤ 12 Nm |
| **UL File No.** | NRKH.E181493 |

[1)] At $I_a$ max.
[2)] Ub and Ta constant.
[3)] Of Sr.

## Safety-related parameters

| | |
|---|---|
| **$MTTF_D$** | 1,735 years |
| **$DC_{avg}$** | 0 % |

## Reduction factors

| | |
|---|---|
| **Note** | The values are reference values which may vary |
| **St37 steel (Fe)** | 1 |
| **Stainless steel (V2A, 304)** | Approx. 0.8 |
| **Aluminum (Al)** | Approx. 0.45 |
| **Copper (Cu)** | Approx. 0.4 |
| **Brass (Br)** | Approx. 0.4 |

## Installation note

| | |
|---|---|
| **Remark** | Associated graphic see "Installation" |
| **A** | 12 mm |
| **B** | 24 mm |
| **C** | 12 mm |
| **D** | 24 mm |
| **E** | 16 mm |
| **F** | 64 mm |

# IME12-08NPSZWDSS61 | IME

INDUCTIVE PROXIMITY SENSORS

## Classifications

| | |
|---|---|
| **eCl@ss 5.0** | 27270101 |
| **eCl@ss 5.1.4** | 27270101 |
| **eCl@ss 6.0** | 27270101 |
| **eCl@ss 6.2** | 27270101 |
| **eCl@ss 7.0** | 27270101 |
| **eCl@ss 8.0** | 27270101 |
| **eCl@ss 8.1** | 27270101 |
| **eCl@ss 9.0** | 27270101 |
| **eCl@ss 10.0** | 27270101 |
| **eCl@ss 11.0** | 27270101 |
| **eCl@ss 12.0** | 27274001 |
| **ETIM 5.0** | EC002714 |
| **ETIM 6.0** | EC002714 |
| **ETIM 7.0** | EC002714 |
| **ETIM 8.0** | EC002714 |
| **UNSPSC 16.0901** | 39122230 |

## Installation note

Non-flush installation

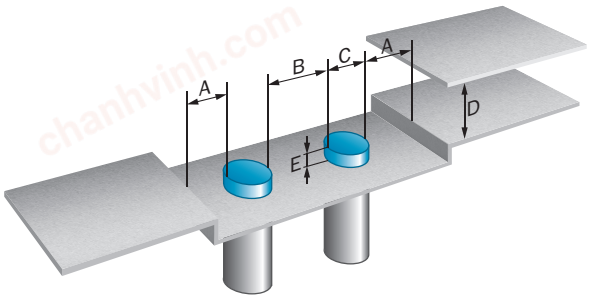


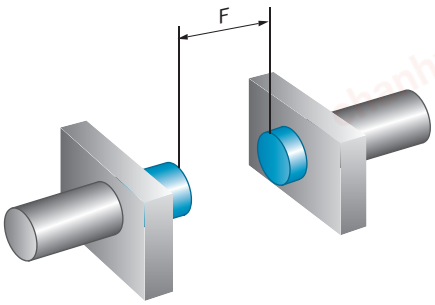


## Connection diagram

Cd-001

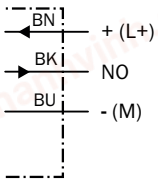

chanhvinh.com



## Dimensional drawing (Dimensions in mm (inch))

IME12 standard, cable with male connector, non-flush

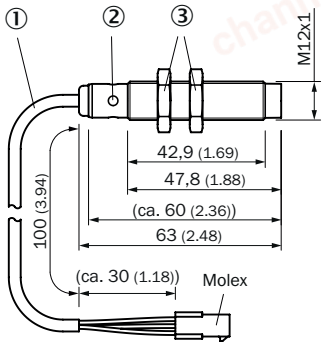


Molex PIN configuration




1: BN: L+
2: not connected
3: BU: L– (M)
4: BK: Q

① Connection
② Display LED
③ Fastening nuts (2x); width across 17, metal

## Recommended accessories

Other models and accessories ➜ www.sick.com/IME

| | Brief description | Type | Part no. |
|---|---|---|---|
| Mounting brackets and plates | | | |
|  | Mounting plate for M12 sensors, steel, zinc coated, without mounting hardware | BEF-WG-M12 | 5321869 |
|  | Mounting bracket for M12 sensors, steel, zinc coated, without mounting hardware | BEF-WN-M12 | 5308447 |
| Terminal and alignment brackets | | | |
|  | Clamping block for round sensors M12, without fixed stop, plastic (PA12), glass-fiber reinforced, mounting hardware included | BEF-KH-M12 | 2051479 |
| | Clamping block for round sensors M12, with fixed stop, plastic (PA12), glass-fiber reinforced, mounting hardware included | BEF-KHF-M12 | 2051480 |

chanhvinh.com



# SICK AT A GLANCE

SICK is one of the leading manufacturers of intelligent sensors and sensor solutions for industrial applications. A unique range of products and services creates the perfect basis for controlling processes securely and efficiently, protecting individuals from accidents and preventing damage to the environment.

We have extensive experience in a wide range of industries and understand their processes and requirements. With intelligent sensors, we can deliver exactly what our customers need. In application centers in Europe, Asia and North America, system solutions are tested and optimized in accordance with customer specifications. All this makes us a reliable supplier and development partner.

Comprehensive services complete our offering: SICK LifeTime Services provide support throughout the machine life cycle and ensure safety and productivity.

**For us, that is “Sensor Intelligence.”**

# WORLDWIDE PRESENCE:

Contacts and other locations –www.sick.com



SICK
Sensor Intelligence.