chanhvinh.com

Product data sheet



IME08-02BPOVT0SS08

IME

INDUCTIVE PROXIMITY SENSORS

SICK
Sensor Intelligence.

chanhvinh.com

IME08-02BP0VT0SS08 | IME

INDUCTIVE PROXIMITY SENSORS



Illustration may differ

Ordering information

Type	Part no.
IME08-02BP0VT0SS08	1048214

Other models and accessories → www.sick.com/IME

Detailed technical data

Features

Housing	Cylindrical thread design
Housing	Standard design
Thread size	M8 x 1
Diameter	Ø 8 mm
Sensing range S_n	2 mm
Safe sensing range S_a	1.62 mm
Installation type	Flush
Switching frequency	4,000 Hz
Connection type	Connector M8, 3-pin
Switching output	PNP
Output function	NC
Electrical wiring	DC 3-wire
Enclosure rating	IP65 [1]
Special characteristic	Continuous thread with 2 LEDs
Items supplied	Mounting nut, V2A stainless steel (2x)

[1] According to EN 60529.

Mechanics/electronics

Supply voltage	10 V DC ... 30 V DC
Ripple	≤ 10 %
Voltage drop	≤ 2 V [1]
Time delay before availability	≤ 100 ms

[1] At I_a max.

[2] Ub and Ta constant.

[3] Of Sr.

chanhvinh.com

Hysteresis	5 % ... 15 %
Reproducibility	≤ 2 % [2) 3)]
Temperature drift (of S_r)	± 10 %
EMC	According to EN 60947-5-2
Continuous current I_a	≤ 200 mA
No load current	≤ 10 mA
Short-circuit protection	✓
Reverse polarity protection	✓
Power-up pulse protection	✓
Shock and vibration resistance	30 g, 11 ms/10 Hz ... 55 Hz, 1 mm
Ambient operating temperature	–25 °C ... +75 °C
Housing material	Stainless steel V2A, DIN 1.4305 / AISI 303
Sensing face material	Plastic, PA 66
Housing length	56 mm
Thread length	52 mm
Tightening torque, max.	≤ 7 Nm
UL File No.	NRKH.E181493

[1)] At I_a max.
[2)] Ub and Ta constant.
[3)] Of Sr.

Safety-related parameters

$MTTF_D$	1,735 years
DC_{avg}	0 %
T_M (mission time)	20 years

Reduction factors

Note	The values are reference values which may vary
St37 steel (Fe)	1
Stainless steel (V2A, 304)	Approx. 0.8
Aluminum (Al)	Approx. 0.45
Copper (Cu)	Approx. 0.4
Brass (Br)	Approx. 0.4

Installation note

Remark	Associated graphic see "Installation"
B	16 mm
C	8 mm
D	6 mm
F	16 mm

Classifications

eCl@ss 5.0	27270101
eCl@ss 5.1.4	27270101

eCl@ss 6.0	27270101
eCl@ss 6.2	27270101
eCl@ss 7.0	27270101
eCl@ss 8.0	27270101
eCl@ss 8.1	27270101
eCl@ss 9.0	27270101
eCl@ss 10.0	27270101
eCl@ss 11.0	27270101
eCl@ss 12.0	27274001
ETIM 5.0	EC002714
ETIM 6.0	EC002714
ETIM 7.0	EC002714
ETIM 8.0	EC002714
UNSPSC 16.0901	39122230

Installation note

Flush installation

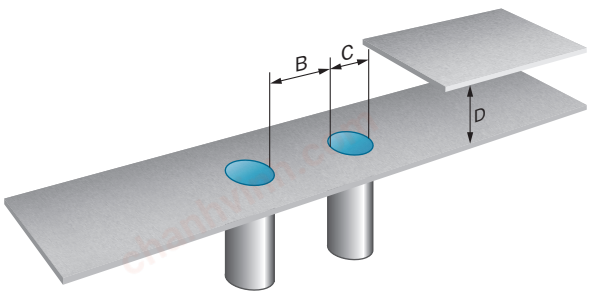

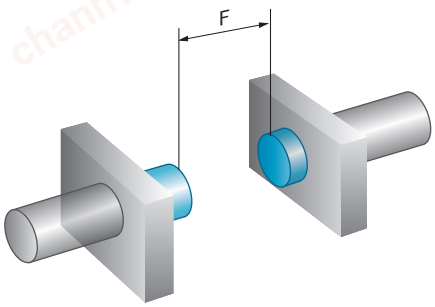

Connection diagram

Cd-004

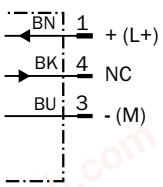

chanhvinh.com

Dimensional drawing (Dimensions in mm (inch))

IME08 Standard, connector, flush

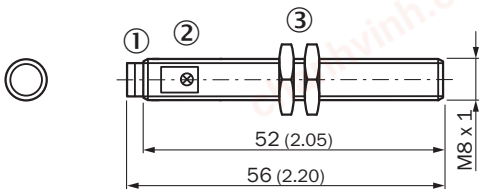

① Connection
② Display LED
③ Fastening nuts (2 x); width across 13, stainless steel V2A

Recommended accessories

Other models and accessories ➜ www.sick.com/IME

	Brief description	Type	Part no.
Mounting brackets and plates			
	Mounting plate for M8 sensors, steel, zinc coated, without mounting hardware	BEF-WG-M08	5321722
	Mounting bracket for M8 sensors, steel, zinc coated, without mounting hardware	BEF-WN-M08	5321721
Plug connectors and cables			
	Head A: female connector, M8, 3-pin, straight, A-coded Head B: Flying leads Cable: Sensor/actuator cable, PVC, unshielded, 2 m	YF8U13-020VA1XLEAX	2095860
	Head A: female connector, M8, 3-pin, straight, A-coded Head B: Flying leads Cable: Sensor/actuator cable, PVC, unshielded, 5 m	YF8U13-050VA1XLEAX	2095884
	Head A: female connector, M8, 3-pin, straight, A-coded Head B: Flying leads Cable: Sensor/actuator cable, PVC, unshielded, 10 m	YF8U13-100VA1XLEAX	2095885
	Head A: female connector, M8, 3-pin, angled, A-coded Head B: Flying leads Cable: Sensor/actuator cable, PVC, unshielded, 2 m	YG8U13-020VA1XLEAX	2096165
	Head A: female connector, M8, 3-pin, angled, A-coded Head B: Flying leads Cable: Sensor/actuator cable, PVC, unshielded, 5 m	YG8U13-050VA1XLEAX	2096166
	Head A: female connector, M8, 3-pin, angled, A-coded Head B: Flying leads Cable: Sensor/actuator cable, PVC, unshielded, 10 m	YG8U13-100VA1XLEAX	2096209
Terminal and alignment brackets			
	Clamping block for round sensors M8, without fixed stop, plastic (PA12), glass-fiber reinforced, mounting hardware included	BEF-KH-M08	2051477
	Clamping block for round sensors M8, with fixed stop, plastic (PA12), glass-fiber reinforced, mounting hardware included	BEF-KHF-M08	2051478

chanhvinh.com

SICK AT A GLANCE

SICK is one of the leading manufacturers of intelligent sensors and sensor solutions for industrial applications. A unique range of products and services creates the perfect basis for controlling processes securely and efficiently, protecting individuals from accidents and preventing damage to the environment.

We have extensive experience in a wide range of industries and understand their processes and requirements. With intelligent sensors, we can deliver exactly what our customers need. In application centers in Europe, Asia and North America, system solutions are tested and optimized in accordance with customer specifications. All this makes us a reliable supplier and development partner.

Comprehensive services complete our offering: SICK LifeTime Services provide support throughout the machine life cycle and ensure safety and productivity.

For us, that is "Sensor Intelligence."

WORLDWIDE PRESENCE:

Contacts and other locations –www.sick.com

SICK
Sensor Intelligence.