chanhvinh.com

Product data sheet



# IM08-1B5PS-ZTK

## IM Standard

**INDUCTIVE PROXIMITY SENSORS**

SICK
Sensor Intelligence.

chanhvinh.com

# IM08-1B5PS-ZTK | IM Standard

INDUCTIVE PROXIMITY SENSORS



Illustration may differ

## Ordering information

| Type | Part no. |
|---|---|
| IM08-1B5PS-ZTK | 6020112 |

Other models and accessories → www.sick.com/IM_Standard

## Detailed technical data

### Features

| | |
|---|---|
| **Housing** | Cylindrical thread design |
| **Housing** | Short-body |
| **Thread size** | M8 x 1 |
| **Diameter** | Ø 8 mm |
| **Sensing range $S_n$** | 1.5 mm |
| **Safe sensing range $S_a$** | 1.22 mm |
| **Installation type** | Flush |
| **Switching frequency** | 5,000 Hz |
| **Connection type** | Connector M8, 3-pin |
| **Switching output** | PNP |
| **Output function** | NO |
| **Electrical wiring** | DC 3-wire |
| **Enclosure rating** | IP67 [1] |

[1] According to EN 60529.

### Mechanics/electronics

| | |
|---|---|
| **Supply voltage** | 10 V DC ... 30 V DC |
| **Ripple** | ≤ 20 % [1] |
| **Voltage drop** | ≤ 2 V [2] |
| **Time delay before availability** | ≤ 10 ms |
| **Hysteresis** | ≤ 10 % |
| **Reproducibility** | ≤ 5 % [3] [4] |
| **Temperature drift (of $S_r$)** | ± 10 % |
| **EMC** | According to EN 60947-5-2 |

[1] Of $V_S$.
[2] At $I_a$ max.
[3] Ub and Ta constant.
[4] Of Sr.

chanhvinh.com



| | |
|---|---|
| **Continuous current $I_a$** | ≤ 200 mA |
| **Short-circuit protection** | ✓ |
| **Reverse polarity protection** | ✓ |
| **Power-up pulse protection** | ✓ |
| **Shock and vibration resistance** | 30 g, 11 ms / 10 ... 55 Hz, 1 mm |
| **Ambient operating temperature** | –25 °C ... +70 °C |
| **Housing material** | Brass, Nickel-plated brass |
| **Sensing face material** | Plastic |
| **Housing length** | 29 mm |
| **Thread length** | 12 mm |
| **Tightening torque, max.** | 4 Nm |

[1] Of $V_S$.
[2] At $I_a$ max.
[3] Ub and Ta constant.
[4] Of Sr.

## Safety-related parameters

| | |
|---|---|
| **$MTTF_D$** | 186 years |
| **$DC_{avg}$** | 0 % |
| **$T_M$ (mission time)** | 20 years |

## Reduction factors

| | |
|---|---|
| **Note** | The values are reference values which may vary |
| **Stainless steel (V2A, 304)** | Approx. 0.8 |
| **Aluminum (Al)** | Approx. 0.45 |
| **Copper (Cu)** | Approx. 0.4 |
| **Brass (Br)** | Approx. 0.5 |

## Installation note

| | |
|---|---|
| **Remark** | Associated graphic see "Installation" |
| **A** | 1.5 mm |
| **B** | 2 mm |
| **C** | 8 mm |
| **D** | 4.5 mm |
| **E** | 0 mm |
| **F** | 12 mm |

## Classifications

| | |
|---|---|
| **eCl@ss 5.0** | 27270101 |
| **eCl@ss 5.1.4** | 27270101 |
| **eCl@ss 6.0** | 27270101 |
| **eCl@ss 6.2** | 27270101 |
| **eCl@ss 7.0** | 27270101 |
| **eCl@ss 8.0** | 27270101 |
| **eCl@ss 8.1** | 27270101 |

chanhvinh.com

# IM08-1B5PS-ZTK | IM Standard

INDUCTIVE PROXIMITY SENSORS

| | |
|---|---|
| **eCl@ss 9.0** | 27270101 |
| **eCl@ss 10.0** | 27270101 |
| **eCl@ss 11.0** | 27270101 |
| **eCl@ss 12.0** | 27274001 |
| **ETIM 5.0** | EC002714 |
| **ETIM 6.0** | EC002714 |
| **ETIM 7.0** | EC002714 |
| **ETIM 8.0** | EC002714 |
| **UNSPSC 16.0901** | 39122230 |

## Installation note

Flush installation

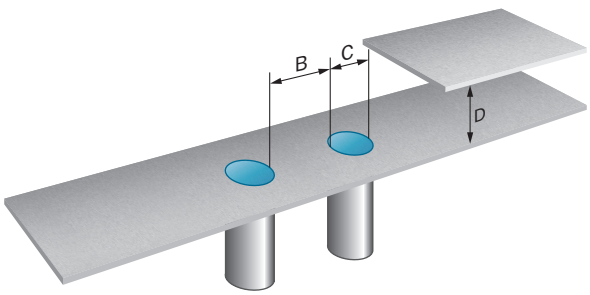


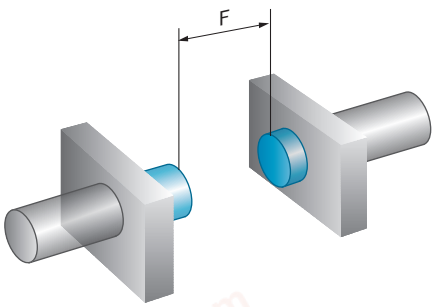


## Connection type

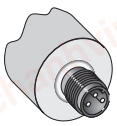

## Connection diagram

Cd-002

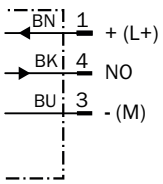

chanhvinh.com



## Dimensional drawing (Dimensions in mm (inch))

IM08, male connector, flush

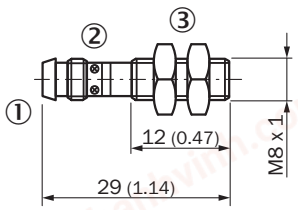


① Connection
② Display LED
③ Fastening nuts (2x); width across 13, metal

## Recommended accessories

Other models and accessories ➜ www.sick.com/IM_Standard

| | Brief description | Type | Part no. |
|---|---|---|---|
| Mounting brackets and plates | | | |
|  | Mounting plate for M8 sensors, steel, zinc coated, without mounting hardware | BEF-WG-M08 | 5321722 |
|  | Mounting bracket for M8 sensors, steel, zinc coated, without mounting hardware | BEF-WN-M08 | 5321721 |
| Plug connectors and cables | | | |
|  | Head A: female connector, M8, 3-pin, straight, A-coded<br>Head B: Flying leads<br>Cable: Sensor/actuator cable, PVC, unshielded, 2 m | YF8U13-020VA1XLEAX | 2095860 |
| | Head A: female connector, M8, 3-pin, straight, A-coded<br>Head B: Flying leads<br>Cable: Sensor/actuator cable, PVC, unshielded, 5 m | YF8U13-050VA1XLEAX | 2095884 |
|  | Head A: female connector, M8, 3-pin, angled, A-coded<br>Head B: Flying leads<br>Cable: Sensor/actuator cable, PVC, unshielded, 2 m | YG8U13-020VA1XLEAX | 2096165 |
| | Head A: female connector, M8, 3-pin, angled, A-coded<br>Head B: Flying leads<br>Cable: Sensor/actuator cable, PVC, unshielded, 5 m | YG8U13-050VA1XLEAX | 2096166 |
|  | Head A: female connector, M8, 3-pin, straight<br>Cable: unshielded | DOS-0803-G | 7902077 |
|  | Head A: female connector, M8, 3-pin, angled<br>Cable: unshielded | DOS-0803-W | 7902078 |
|  | Head A: male connector, M8, 3-pin, straight<br>Cable: unshielded | STE-0803-G | 6037322 |

chanhvinh.com

# IM08-1B5PS-ZTK | IM Standard

INDUCTIVE PROXIMITY SENSORS

| | Brief description | Type | Part no. |
|---|---|---|---|
| Terminal and alignment brackets | | | |
|  | Clamping block for round sensors M8, without fixed stop, plastic (PA12), glass-fiber reinforced, mounting hardware included | BEF-KH-M08 | 2051477 |

chanhvinh.com

chanhvinh.com



# SICK AT A GLANCE

SICK is one of the leading manufacturers of intelligent sensors and sensor solutions for industrial applications. A unique range of products and services creates the perfect basis for controlling processes securely and efficiently, protecting individuals from accidents and preventing damage to the environment.

We have extensive experience in a wide range of industries and understand their processes and requirements. With intelligent sensors, we can deliver exactly what our customers need. In application centers in Europe, Asia and North America, system solutions are tested and optimized in accordance with customer specifications. All this makes us a reliable supplier and development partner.

Comprehensive services complete our offering: SICK LifeTime Services provide support throughout the machine life cycle and ensure safety and productivity.

**For us, that is "Sensor Intelligence."**

# WORLDWIDE PRESENCE:

Contacts and other locations –www.sick.com



SICK
Sensor Intelligence.