chanhvinh.com

Product data sheet



IM08-02BPS-ZTK

IM Standard

INDUCTIVE PROXIMITY SENSORS

SICK
Sensor Intelligence.

chanhvinh.com

IM08-02BPS-ZTK | IM Standard

INDUCTIVE PROXIMITY SENSORS



Illustration may differ

Ordering information

Type	Part no.
IM08-02BPS-ZTK	6025863

Other models and accessories → www.sick.com/IM_Standard

Detailed technical data

Features

Housing	Cylindrical thread design
Housing	Short-body
Thread size	M8 x 1
Diameter	Ø 8 mm
Sensing range S_n	2 mm
Installation type	Flush
Switching frequency	3,000 Hz
Connection type	Connector M8, 3-pin
Switching output	PNP
Output function	NO
Electrical wiring	DC 3-wire
Enclosure rating	IP67 [1]

[1] According to EN 60529.

Mechanics/electronics

Supply voltage	10 V DC ... 30 V DC
Ripple	≤ 10 % [1]
Voltage drop	≤ 1.2 V [2]
Time delay before availability	≤ 5 ms
Hysteresis	1 % ... 20 %
Reproducibility	≤ 5 % [3] [4]
Temperature drift (of S_r)	± 10 %

[1] Of V_S.
[2] At I_a max.
[3] Ub and Ta constant.
[4] Of Sr.

chanhvinh.com

EMC	According to EN 60947-5-2
Continuous current I_a	≤ 200 mA
Short-circuit protection	✓
Reverse polarity protection	✓
Power-up pulse protection	✓
Shock and vibration resistance	30 g, 11 ms / 10 ... 55 Hz, 1 mm
Ambient operating temperature	–25 °C ... +70 °C
Housing material	Brass, Nickel-plated brass
Sensing face material	Plastic
Housing length	40 mm
Thread length	25.3 mm
Tightening torque, max.	4 Nm

[1] Of V_S.
[2] At I_a max.
[3] Ub and Ta constant.
[4] Of Sr.

Installation note

Remark	Associated graphic see "Installation"
A	3.25 mm
B	8 mm
C	8 mm
D	6 mm
E	0 mm
F	16 mm

Classifications

eCl@ss 5.0	27270101
eCl@ss 5.1.4	27270101
eCl@ss 6.0	27270101
eCl@ss 6.2	27270101
eCl@ss 7.0	27270101
eCl@ss 8.0	27270101
eCl@ss 8.1	27270101
eCl@ss 9.0	27270101
eCl@ss 10.0	27270101
eCl@ss 11.0	27270101
eCl@ss 12.0	27274001
ETIM 5.0	EC002714
ETIM 6.0	EC002714
ETIM 7.0	EC002714
ETIM 8.0	EC002714
UNSPSC 16.0901	39122230

chanhvinh.com

IM08-02BPS-ZTK | IM Standard

INDUCTIVE PROXIMITY SENSORS

Installation note

Non-flush installation

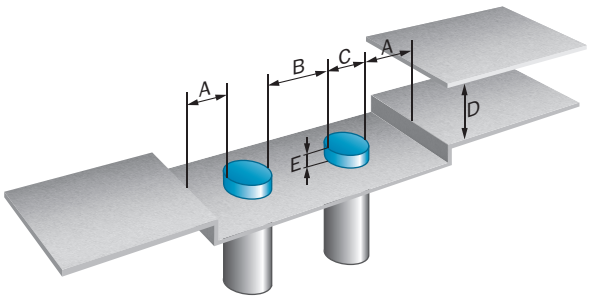

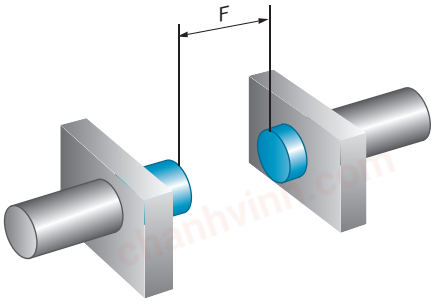

Connection type

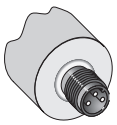

Connection diagram

Cd-002

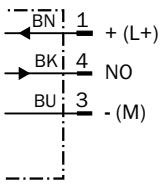

Dimensional drawing (Dimensions in mm (inch))

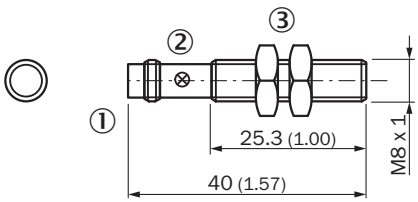

① Connection
② Display LED
③ Fastening nuts (2x); width across 13, metal

chanhvinh.com

Recommended accessories

Other models and accessories ➜ www.sick.com/IM_Standard

	Brief description	Type	Part no.
Mounting brackets and plates			
	Mounting plate for M8 sensors, steel, zinc coated, without mounting hardware	BEF-WG-M08	5321722
	Mounting bracket for M8 sensors, steel, zinc coated, without mounting hardware	BEF-WN-M08	5321721
Plug connectors and cables			
	Head A: female connector, M8, 3-pin, straight, A-coded Head B: Flying leads Cable: Sensor/actuator cable, PVC, unshielded, 2 m	YF8U13-020VA1XLEAX	2095860
	Head A: female connector, M8, 3-pin, straight, A-coded Head B: Flying leads Cable: Sensor/actuator cable, PVC, unshielded, 5 m	YF8U13-050VA1XLEAX	2095884
	Head A: female connector, M8, 3-pin, angled, A-coded Head B: Flying leads Cable: Sensor/actuator cable, PVC, unshielded, 2 m	YG8U13-020VA1XLEAX	2096165
	Head A: female connector, M8, 3-pin, angled, A-coded Head B: Flying leads Cable: Sensor/actuator cable, PVC, unshielded, 5 m	YG8U13-050VA1XLEAX	2096166
	Head A: female connector, M8, 3-pin, straight Cable: unshielded	DOS-0803-G	7902077
	Head A: female connector, M8, 3-pin, angled Cable: unshielded	DOS-0803-W	7902078
	Head A: male connector, M8, 3-pin, straight Cable: unshielded	STE-0803-G	6037322
Terminal and alignment brackets			
	Clamping block for round sensors M8, without fixed stop, plastic (PA12), glass-fiber reinforced, mounting hardware included	BEF-KH-M08	2051477

chanhvinh.com

SICK AT A GLANCE

SICK is one of the leading manufacturers of intelligent sensors and sensor solutions for industrial applications. A unique range of products and services creates the perfect basis for controlling processes securely and efficiently, protecting individuals from accidents and preventing damage to the environment.

We have extensive experience in a wide range of industries and understand their processes and requirements. With intelligent sensors, we can deliver exactly what our customers need. In application centers in Europe, Asia and North America, system solutions are tested and optimized in accordance with customer specifications. All this makes us a reliable supplier and development partner.

Comprehensive services complete our offering: SICK LifeTime Services provide support throughout the machine life cycle and ensure safety and productivity.

For us, that is "Sensor Intelligence."

WORLDWIDE PRESENCE:

Contacts and other locations –www.sick.com