chanhvinh.com

Product data sheet

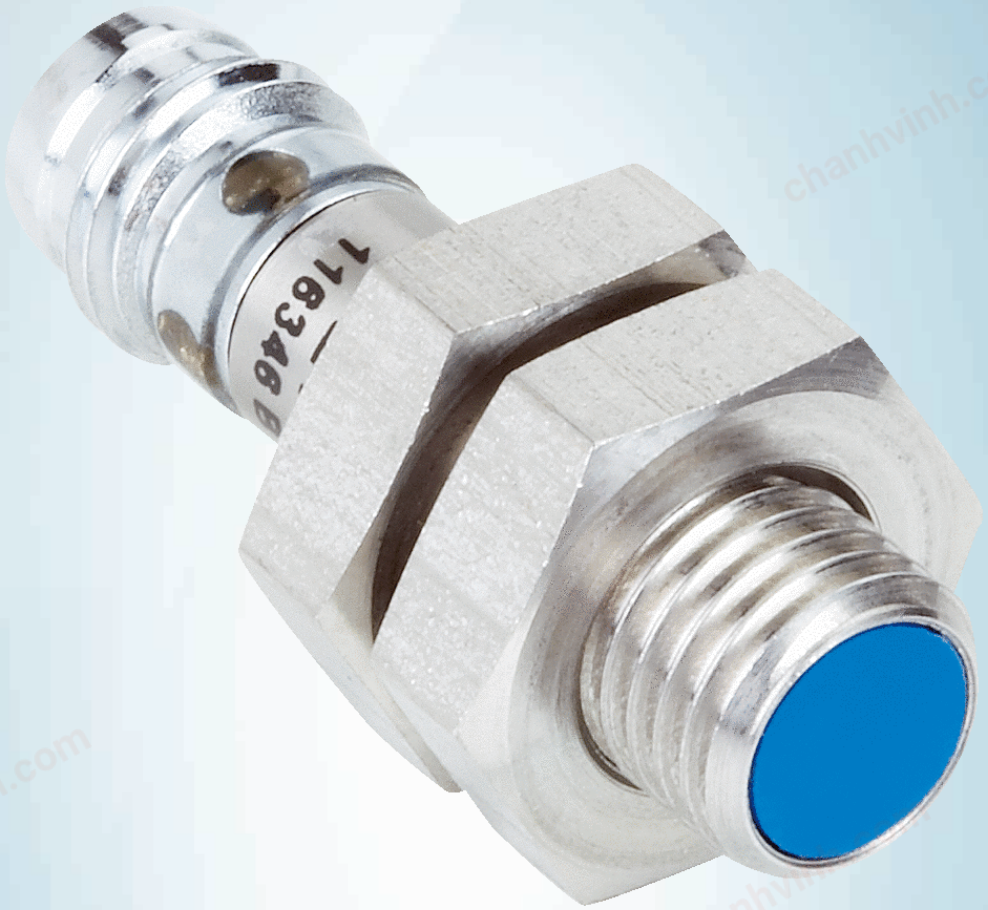

IM08-02BP0-VW1

IM Standard

INDUCTIVE PROXIMITY SENSORS

SICK
Sensor Intelligence.

chanhvinh.com

IM08-02BPO-VW1 | IM Standard

INDUCTIVE PROXIMITY SENSORS

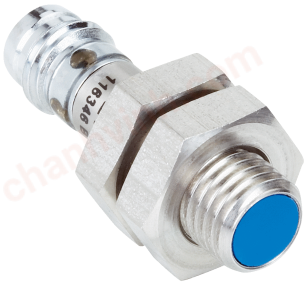

Illustration may differ

Ordering information

Type	Part no.
IM08-02BPO-VW1	6029840

Other models and accessories → www.sick.com/IM_Standard

Detailed technical data

Features

Housing	Cylindrical thread design
Housing	Standard design
Thread size	M8 x 1
Diameter	Ø 8 mm
Sensing range S_n	2 mm
Installation type	Flush
Switching frequency	3,000 Hz
Connection type	Cable, 3-wire, 2 m
Switching output	PNP
Output function	NC
Electrical wiring	DC 3-wire
Enclosure rating	IP67 [1]

[1] According to EN 60529.

Mechanics/electronics

Supply voltage	10 V DC ... 30 V DC
Ripple	≤ 10 % [1]
Voltage drop	≤ 1.2 V [2]
Time delay before availability	≤ 100 ms
Hysteresis	2 % ... 15 %
Reproducibility	≤ 5 % [3] [4]
Temperature drift (of S_r)	± 10 %

[1] Of V_S.
[2] At I_a max.
[3] Ub and Ta constant.
[4] Of Sr.

chanhvinh.com

EMC	According to EN 60947-5-2
Continuous current I_a	≤ 200 mA
Cable material	PVC
Conductor size	0.14 mm²
Short-circuit protection	✓
Reverse polarity protection	✓
Power-up pulse protection	✓
Shock and vibration resistance	30 g, 11 ms / 10 ... 55 Hz, 1 mm
Ambient operating temperature	–25 °C ... +80 °C
Housing material	Stainless steel
Sensing face material	Plastic
Housing length	45 mm
Thread length	40.2 mm
Tightening torque, max.	≤ 4 Nm

[1] Of V_S.
[2] At I_a max.
[3] Ub and Ta constant.
[4] Of Sr.

Installation note

Remark	Associated graphic see "Installation"

Classifications

eCl@ss 5.0	27270101
eCl@ss 5.1.4	27270101
eCl@ss 6.0	27270101
eCl@ss 6.2	27270101
eCl@ss 7.0	27270101
eCl@ss 8.0	27270101
eCl@ss 8.1	27270101
eCl@ss 9.0	27270101
eCl@ss 10.0	27270101
eCl@ss 11.0	27270101
eCl@ss 12.0	27274001
ETIM 5.0	EC002714
ETIM 6.0	EC002714
ETIM 7.0	EC002714
ETIM 8.0	EC002714
UNSPSC 16.0901	39122230

chanhvinh.com

IM08-02BPO-VW1 | IM Standard

INDUCTIVE PROXIMITY SENSORS

Installation note

Non-flush installation

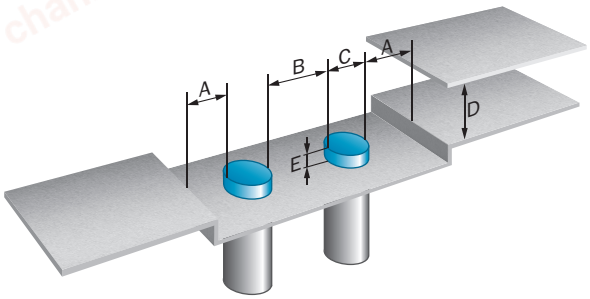

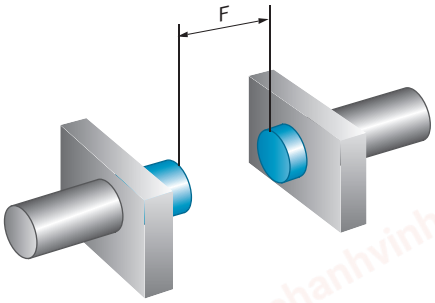

Connection type



Connection diagram

Cd-003

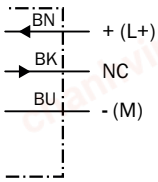

Dimensional drawing (Dimensions in mm (inch))

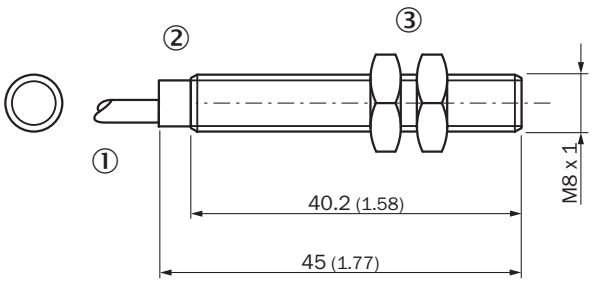

① Connection
② Display LED
③ Fastening nuts (2x); width across 13, metal

chanhvinh.com

Recommended accessories

Other models and accessories ➜ www.sick.com/IM_Standard

	Brief description	Type	Part no.
Mounting brackets and plates			
	Mounting plate for M8 sensors, steel, zinc coated, without mounting hardware	BEF-WG-M08	5321722
	Mounting bracket for M8 sensors, steel, zinc coated, without mounting hardware	BEF-WN-M08	5321721
Terminal and alignment brackets			
	Clamping block for round sensors M8, without fixed stop, plastic (PA12), glass-fiber reinforced, mounting hardware included	BEF-KH-M08	2051477

chanhvinh.com

SICK AT A GLANCE

SICK is one of the leading manufacturers of intelligent sensors and sensor solutions for industrial applications. A unique range of products and services creates the perfect basis for controlling processes securely and efficiently, protecting individuals from accidents and preventing damage to the environment.

We have extensive experience in a wide range of industries and understand their processes and requirements. With intelligent sensors, we can deliver exactly what our customers need. In application centers in Europe, Asia and North America, system solutions are tested and optimized in accordance with customer specifications. All this makes us a reliable supplier and development partner.

Comprehensive services complete our offering: SICK LifeTime Services provide support throughout the machine life cycle and ensure safety and productivity.

For us, that is “Sensor Intelligence.”

WORLDWIDE PRESENCE:

Contacts and other locations –www.sick.com

SICK
Sensor Intelligence.