chanhvinh.com

Product data sheet



GL6-P3411V

G6

MINIATURE PHOTOELECTRIC SENSORS

SICK
Sensor Intelligence.

chanhvinh.com

GL6-P3411V | G6

MINIATURE PHOTOELECTRIC SENSORS



Illustration may differ

Ordering information

Type	Part no.
GL6-P3411V	1097411

Other models and accessories → www.sick.com/G6

Detailed technical data

Features

Functional principle	Photoelectric retro-reflective sensor
Functional principle detail	Dual lens
Sensing range max.	0.03 m ... 6 m [1]
Sensing range	0.07 m ... 5 m [1]
Polarisation filters	Yes
Emitted beam	
Light source	PinPoint LED [2]
Type of light	Visible red light
Light spot size (distance)	Ø 8 mm (350 mm)
Key LED figures	
Wave length	650 nm
Adjustment	Potentiometer, 270°
Special applications	Hygienic and washdown zones

[1] Reflector PL80A.

[2] Average service life: 100,000 h at T_U = +25 °C.

Electrical data

Supply voltage U_B	10 V DC ... 30 V DC [1]

[1] Limit values when operated in short-circuit protected network: max. 8 A.

[2] May not exceed or fall below U_V tolerances.

[3] Without load.

[4] At Uv > 24 V, IA max. = 50 mA.

[5] Signal transit time with resistive load.

[6] With light/dark ratio 1:1.

[7] A = V_S connections reverse-polarity protected.

[8] B = inputs and output reverse-polarity protected.

[9] D = outputs overcurrent and short-circuit protected.

chanhvinh.com

Ripple	± 10 % [2]
Current consumption	30 mA [3]
Protection class	III
Digital output	
Type	PNP
Switching mode	Dark switching
Signal voltage PNP HIGH/LOW	V_S - (≤ 3 V) / approx. 0 V
Output current $I_{max.}$	≤ 100 mA [4]
Response time	< 625 µs [5]
Switching frequency	1,000 Hz [6]
Circuit protection	A [7] B [8] D [9]

[1] Limit values when operated in short-circuit protected network: max. 8 A.
[2] May not exceed or fall below U_V tolerances.
[3] Without load.
[4] At Uv > 24 V, IA max. = 50 mA.
[5] Signal transit time with resistive load.
[6] With light/dark ratio 1:1.
[7] A = V_S connections reverse-polarity protected.
[8] B = inputs and output reverse-polarity protected.
[9] D = outputs overcurrent and short-circuit protected.

Mechanical data

Housing	Rectangular
Dimensions (W x H x D)	15 mm x 44 mm x 22 mm
Connection	Connector M8, 3-pin
Material	
Housing	Stainless steel, Stainless steel V4A (1.4404, 316L)
Front screen	Plastic, PMMA
Weight	40 g

Ambient data

Enclosure rating	IP67 IP69K [1]
Ambient operating temperature	–25 °C ... +55 °C [2]
Ambient temperature, storage	–30 °C ... +75 °C
UL File No.	NRKH.E348498 & NRKH7.E348498

[1] According to ISO 20653:2013-03.
[2] Temperature stability following adjustment +/-10 °C.

Classifications

ECLASS 5.0	27270902
ECLASS 5.1.4	27270902
ECLASS 6.0	27270902
ECLASS 6.2	27270902

ECLASS 7.0	27270902
ECLASS 8.0	27270902
ECLASS 8.1	27270902
ECLASS 9.0	27270902
ECLASS 10.0	27270902
ECLASS 11.0	27270902
ECLASS 12.0	27270902
ETIM 5.0	EC002717
ETIM 6.0	EC002717
ETIM 7.0	EC002717
ETIM 8.0	EC002717
UNSPSC 16.0901	39121528

Connection diagram

Cd-045

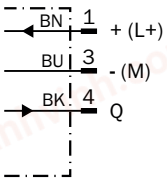

chanhvinh.com

Characteristic curve

GL6 Inox, Red, Standard

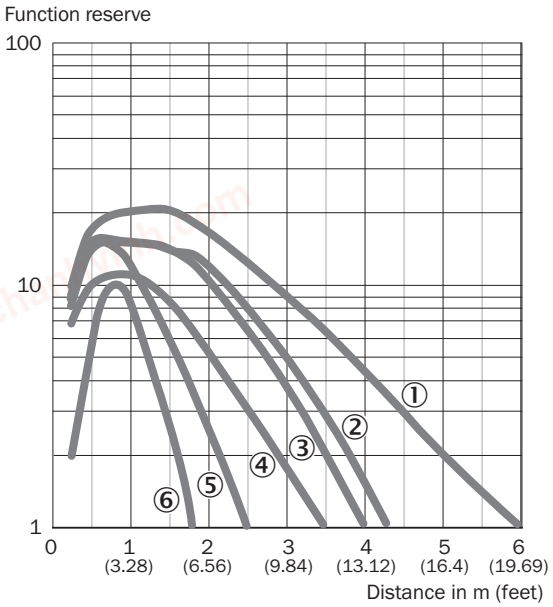

① Reflector PL80A
② Reflector PL40A
③ Reflector P250
④ Reflector P250 CHEM
⑤ Reflector PL20A
⑥ Reflective tape REF-IRF-56

Light spot size

GL6 Inox, Red, Standard

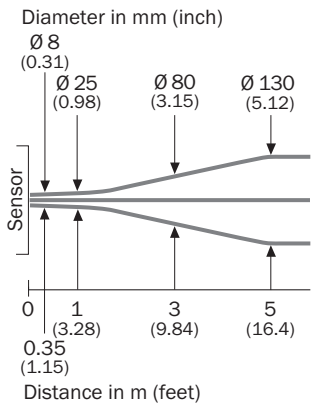

Sensing range diagram

GL6 Inox, Red, Standard

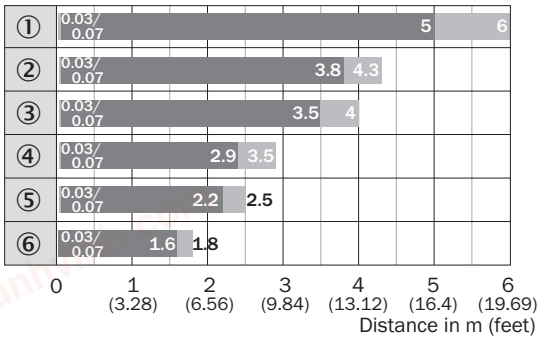

Sensing range Sensing range max.

① Reflector PL80A
② Reflector PL40A
③ Reflector P250
④ Reflector P250 CHEM
⑤ Reflector PL20A
⑥ Reflective tape REF-IRF-56

chanhvinh.com

Dimensional drawing (Dimensions in mm (inch))

GTB6, GTE6, GL6, GSE6 Inox, male connector

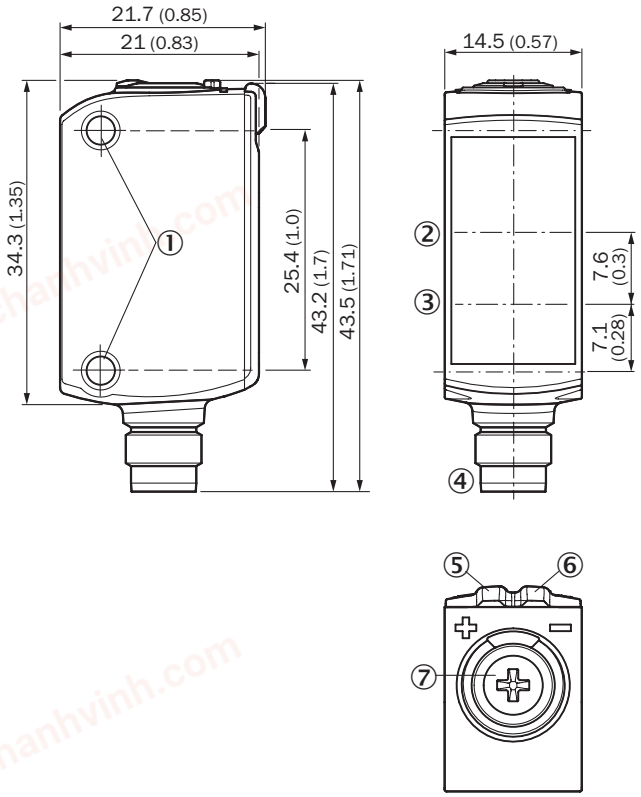

① M3 mounting hole
② Optical axis, receiver
③ Optical axis, sender
④ Connection
⑤ LED indicator yellow: Status of received light beam
⑥ LED indicator green: Supply voltage active
⑦ Potentiometer

Recommended accessories

Other models and accessories ➜ www.sick.com/G6

	Brief description	Type	Part no.
Universal bar clamp systems			
	Clamp bar to fix G6 sensors on rods of 12 mm, clamp-on design up to 4 mm wall thickness, aluminum (clamp bar), stainless steel (bracket), clamp bar mounting and clamp function, mounting bracket, mounting hardware	BEF-KHS-IS12G6	2086865
Mounting brackets and plates			
	Mounting bracket for wall mounting, stainless steel, mounting hardware included	BEF-W100-A	5311520
	Universal mounting bracket for reflectors, steel, zinc coated	BEF-WN-REFX	2064574

chanhvinh.com

GL6-P3411V | G6

MINIATURE PHOTOELECTRIC SENSORS

	Brief description	Type	Part no.
Plug connectors and cables			
	• **Connection type head A:** Female connector, M8, 3-pin, straight, A-coded • **Connection type head B:** Flying leads • **Signal type:** Sensor/actuator cable • **Cable:** 5 m, 3-wire, PVC • **Description:** Sensor/actuator cable, unshielded • **Application:** Zones with chemicals	YF8U13-050VA1XLEAX	2095884
	• **Connection type head A:** Male connector, M8, 3-pin, straight • **Description:** Unshielded • **Connection systems:** Screw-type terminals • **Permitted cross-section:** 0.14 mm² ... 0.5 mm²	STE-0803-G	6037322
Reflectors			
	Chemically resistant, screw connection, 52 mm x 61 mm, plastic, Screw-on, 2 hole mounting	P250 CHEM	5321097

chanhvinh.com

SICK AT A GLANCE

SICK is one of the leading manufacturers of intelligent sensors and sensor solutions for industrial applications. A unique range of products and services creates the perfect basis for controlling processes securely and efficiently, protecting individuals from accidents and preventing damage to the environment.

We have extensive experience in a wide range of industries and understand their processes and requirements. With intelligent sensors, we can deliver exactly what our customers need. In application centers in Europe, Asia and North America, system solutions are tested and optimized in accordance with customer specifications. All this makes us a reliable supplier and development partner.

Comprehensive services complete our offering: SICK LifeTime Services provide support throughout the machine life cycle and ensure safety and productivity.

For us, that is "Sensor Intelligence."

WORLDWIDE PRESENCE:

Contacts and other locations –www.sick.com