chanhvinh.com

Product data sheet



GE6-N1111S68

G6

MINIATURE PHOTOELECTRIC SENSORS

SICK
Sensor Intelligence.

chanhvinh.com

GE6-N1111S68 | G6

MINIATURE PHOTOELECTRIC SENSORS



Illustration may differ

Ordering information

Type	Part no.
GE6-N1111S68	2110725

Other models and accessories → www.sick.com/G6

Detailed technical data

Features

Functional principle	Through-beam photoelectric sensor
Sensing range max.	0 m ... 15 m
Sensing range	0 m ... 10 m
Polarisation filters	No
Adjustment	None

Electrical data

Supply voltage U_B	10 V DC ... 30 V DC [1]
Ripple	± 10 % [2]
Current consumption	30 mA [3]
Protection class	III
Digital output	
Type	NPN
Switching mode	Light/dark switching
Switching mode selector	Selectable via light/dark selector
Signal voltage NPN HIGH/LOW	Approx. V_S / ≤ 3 V
Output current $I_{max.}$	≤ 100 mA [4]

[1] Limit values when operated in short-circuit protected network: max. 8 A.
[2] May not exceed or fall below U_V tolerances.
[3] Without load.
[4] At Uv > 24 V, IA max. = 50 mA.
[5] Signal transit time with resistive load.
[6] With light/dark ratio 1:1.
[7] A = V_S connections reverse-polarity protected.
[8] B = inputs and output reverse-polarity protected.
[9] D = outputs overcurrent and short-circuit protected.

chanhvinh.com

Response time	< 500 µs [5]
Switching frequency	1,000 Hz [6]
Circuit protection	A [7] B [8] D [9]
Special feature	Receiver

[1] Limit values when operated in short-circuit protected network: max. 8 A.
[2] May not exceed or fall below U_V tolerances.
[3] Without load.
[4] At Uv > 24 V, IA max. = 50 mA.
[5] Signal transit time with resistive load.
[6] With light/dark ratio 1:1.
[7] A = V_S connections reverse-polarity protected.
[8] B = inputs and output reverse-polarity protected.
[9] D = outputs overcurrent and short-circuit protected.

Mechanical data

Housing	Rectangular
Dimensions (W x H x D)	12 mm x 31.5 mm x 21 mm
Connection	Cable, 3-wire, 2 m [1]
Connection detail	
Conductor size	0.14 mm²
Length of cable (L)	2 m [1]
Material	
Housing	Plastic, ABS/PC
Front screen	Plastic, PMMA
Cable	PVC
Weight	170 g

[1] Do not bend below 0 °C.

Ambient data

Enclosure rating	IP67
Ambient operating temperature	–25 °C ... +55 °C [1]
Ambient temperature, storage	–40 °C ... +70 °C
UL File No.	NRKH.E348498 & NRKH7.E348498

[1] Temperature stability following adjustment +/-10 °C.

Classifications

ECLASS 5.0	27270901
ECLASS 5.1.4	27270901
ECLASS 6.0	27270901
ECLASS 6.2	27270901
ECLASS 7.0	27270901
ECLASS 8.0	27270901
ECLASS 8.1	27270901

ECLASS 9.0	27270901
ECLASS 10.0	27270901
ECLASS 11.0	27270901
ECLASS 12.0	27270901
ETIM 5.0	EC002716
ETIM 6.0	EC002716
ETIM 7.0	EC002716
ETIM 8.0	EC002716
UNSPSC 16.0901	39121528

Adjustments

No adjustment possibility

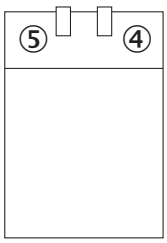

④ LED indicator green: Supply voltage active
⑤ LED indicator yellow: Status of received light beam

Connection type

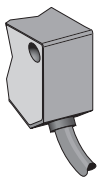

Connection diagram

Cd-043

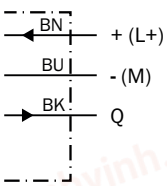

chanhvinh.com

Characteristic curve

GE6-N1111S68, GS6-D1311

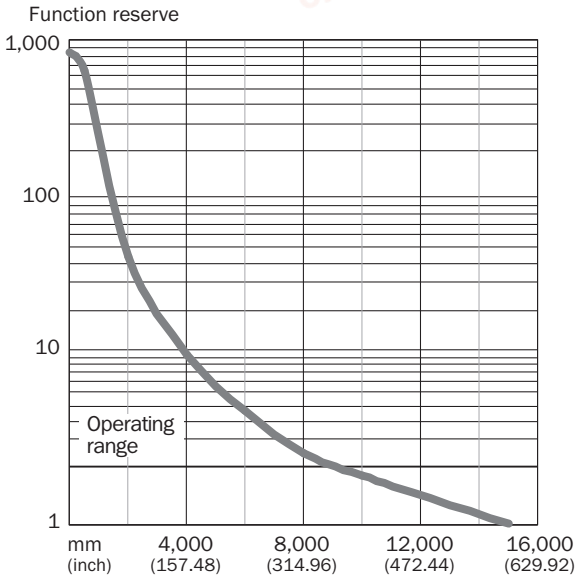

Sensing range diagram

GE6-N1111S68, GS6-D1311

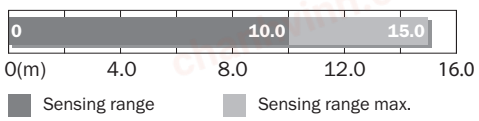

Dimensional drawing (Dimensions in mm (inch))

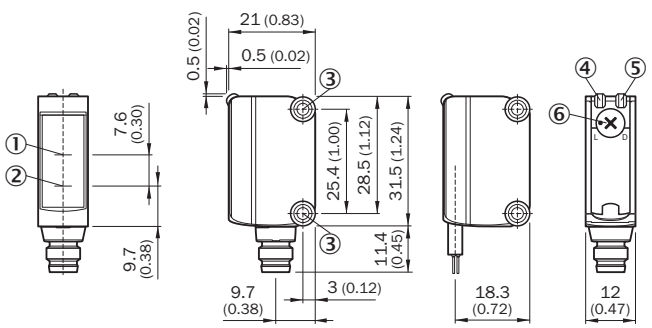

① Optical axis, receiver
② Optical axis, sender
③ Mounting holes M3
④ LED indicator green: Supply voltage active
⑤ LED indicator yellow: Status of received light beam
⑥ Light/ dark rotary switch: L = light switching, D = dark switching

Recommended accessories

Other models and accessories ➜ www.sick.com/G6

	Brief description	Type	Part no.
Universal bar clamp systems			
	Clamp bar to fix G6 sensors on rods of 12 mm, clamp-on design up to 4 mm wall thickness, aluminum (clamp bar), stainless steel (bracket), clamp bar mounting and clamp function, mounting bracket, mounting hardware	BEF-KHS-IS12G6	2086865
Mounting brackets and plates			
	Stainless steel (1.4301)	BEF-WN-G6	2062909
Plug connectors and cables			
	• **Connection type head A:** Male connector, M8, 3-pin, straight • **Description:** Unshielded • **Connection systems:** Screw-type terminals • **Permitted cross-section:** 0.14 mm² ... 0.5 mm²	STE-0803-G	6037322

chanhvinh.com

SICK AT A GLANCE

SICK is one of the leading manufacturers of intelligent sensors and sensor solutions for industrial applications. A unique range of products and services creates the perfect basis for controlling processes securely and efficiently, protecting individuals from accidents and preventing damage to the environment.

We have extensive experience in a wide range of industries and understand their processes and requirements. With intelligent sensors, we can deliver exactly what our customers need. In application centers in Europe, Asia and North America, system solutions are tested and optimized in accordance with customer specifications. All this makes us a reliable supplier and development partner.

Comprehensive services complete our offering: SICK LifeTime Services provide support throughout the machine life cycle and ensure safety and productivity.

For us, that is "Sensor Intelligence."

WORLDWIDE PRESENCE:

Contacts and other locations –www.sick.com