chanhvinh.com

Product data sheet



DL100-21AA2103

Dx100

LONG RANGE DISTANCE SENSORS

SICK
Sensor Intelligence.

chanhvinh.com

DL100-21AA2103 | Dx100

LONG RANGE DISTANCE SENSORS



Illustration may differ

Ordering information

Type	Part no.
DL100-21AA2103	1052688

Other models and accessories → www.sick.com/Dx100

Detailed technical data

Mechanics/electronics

Supply voltage V_S	DC 18 V ... 30 V, limit values
Ripple	5 V_{pp} [1]
Initialization time	Typ. 1.5 s [2]
Housing material	Metal (Aluminum die cast)
Window material	Plastic (PMMA)
Connection type	Male connector, M12, SPEEDCON™ compatible
Indication	6 digit 5 x 7 dot matrix display, LEDs
Weight	Approx. 800 g (with mounting bracket: approx. 1,600 g)
Current consumption	At 24 V DC < 250 mA
Dimensions (W x H x D)	69.4 mm x 82.5 mm x 100.2 mm
Modulation frequency	Fix
Enclosure rating	IP65
Protection class	III

[1] May not fall short of or exceed V_S tolerances.

[2] After loss of reflector < 40 ms.

Safety-related parameters

$MTTF_D$	101 years
DC_{avg}	0%

Performance

Measurement range min ... max:	0.15 m ... 100 m, on “diamond grade” reflective tape
Target	Reflector
Resolution	0.1 mm, 0.125 mm, 1 mm, 10 mm, 100 mm
Repeatability	0.5 mm [1]

[1] Statistical error 1 σ, environmental conditions constant, min. warm-up time 10 min.

[2] From 150 mm ... 180 mm measuring range the accuracy can reach ± 4 mm.

[3] Average service life: 100,000 h at T_U = +25 °C.

chanhvinh.com

Accuracy	± 2 mm [2]
Response time	2 ms
Measurement cycle time	1 ms
Output time	1 ms
Light source	Laser, red [3] visible red light
Laser class	2, complies with 21 CFR 1040.10 and 1040.11 except for the conformance according to “Laser Notice No. 50” from June 24, 2007 (IEC 60825-1:2014, EN 60825-1:2014)
Typ. light spot size (distance)	5 mm + (2 mm x distance in m)
Max. movement speed	15 m/s
Acceleration (max.)	≤ 15 m/s²

[1] Statistical error 1 σ, environmental conditions constant, min. warm-up time 10 min.
[2] From 150 mm ... 180 mm measuring range the accuracy can reach ± 4 mm.
[3] Average service life: 100,000 h at T_U = +25 °C.

Interfaces

Serial	✓, RS-422
Digital output	
Number	2 [1]
Type	Push-pull: PNP/NPN
Function	Distance: Distance switching output Speed; Speed output Service: Warning message as the sensor ages, if the damping value is exceeded (for example when contaminated, if the permitted interior device temperature is exceeded or undercut, if the measured value has a plausibility error, if the laser is not ready for operation, if the heating is switched on Laser off Preset
Maximum output current I_A	≤ 100 mA [2]
Multifunctional input (MF)	1 x MF1 [3]

[1] HIGH = > V_S - 3 V / LOW = < 2 V.
[2] Max. 100 nF/20 mH.
[3] HIGH > 12 V / LOW < 3 V.

Ambient data

Electromagnetic compatibility (EMC)	EN 61000-6-2, EN 61000-6-4 [1]
Ambient temperature, operation	–20 °C ... +55 °C [2] –20 °C ... +75 °C, operation with cooling case [2]
Ambient temperature, storage	–40 °C ... +75 °C
Effect of air pressure	0.3 ppm/hPa
Effect of air temperature	1 ppm/K
Temperature drift	Typ. 0.1 mm/K
Typ. Ambient light immunity	≤ 100,000 lx
Mechanical load	Shock: (EN 600 68-2-27) Sine: (EN 600 68-2-6) Noise: (EN 600 68-2-64)

[1] This is a Class A device. This device can cause radio interference in living quarters.
[2] Temperatures < –10 °C require warm-up time of typ. 7 minutes.

Classifications

ECLASS 5.0	27270801
ECLASS 5.1.4	27270801
ECLASS 6.0	27270801
ECLASS 6.2	27270801
ECLASS 7.0	27270801
ECLASS 8.0	27270801
ECLASS 8.1	27270801
ECLASS 9.0	27270801
ECLASS 10.0	27270801
ECLASS 11.0	27270801
ECLASS 12.0	27270916
ETIM 5.0	EC001825
ETIM 6.0	EC001825
ETIM 7.0	EC001825
ETIM 8.0	EC001825
UNSPSC 16.0901	41111613

chanhvinh.com

chanhvinh.com

Dimensional drawing (Dimensions in mm (inch))

Dimensional drawing

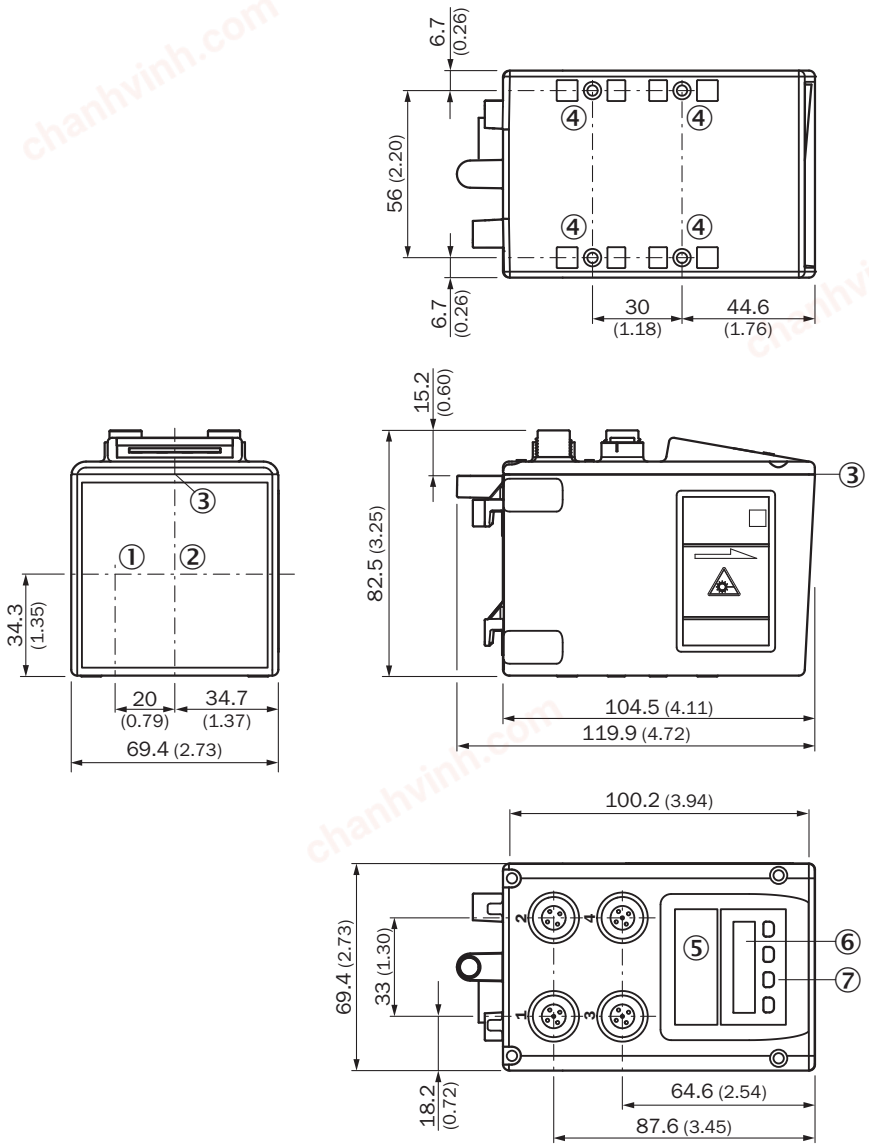

① Optical axis, sender
② Optical axis, receiver
③ Zero level
④ Threaded mounting hole M5
⑤ Status LED [status]
⑥ Display
⑦ Control elements

Connection type

Ethernet connection type

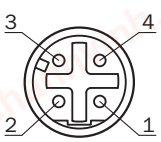

SSI/RS-422 connection type

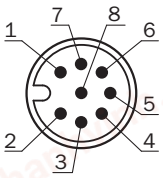

Connection diagram

SSI/RS-422 connection diagram

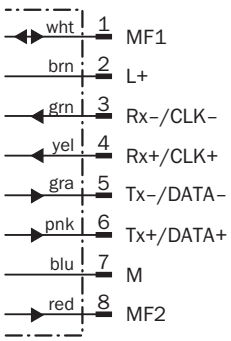

Ethernet connection diagram

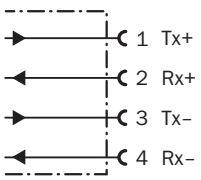

Adjustment possible

DL100-xxXXxx02

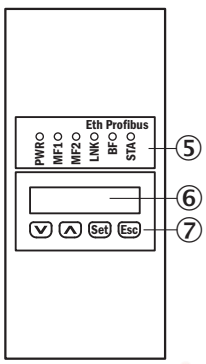

⑤ Status LED [status]
⑥ Display
⑦ Control elements

chanhvinh.com

Recommended accessories

Other models and accessories ➜ www.sick.com/Dx100

	Brief description	Type	Part no.
Sets and kits			
	Accessory kit for upgrade from DME3000 SSI/RS-422 to Dx100 SSI/RS-422	DME3000 Dx100 SSI/RS-422 upgrade kit	2065223
	Accessory kit for upgrade from DME4000/5000 SSI/RS-422 to Dx100 SSI/RS-422	DME4000/5000 Dx100 SSI/RS-422 upgrade kit	2065221
Distributors			
	Head A: female connector, M12, 8-pin, A-coded Head B: Flying leads Cable: PUR, 2 m	YF2A28-020XXXXLEAX Y-junctions	6048329
Plug connectors and cables			
	Head A: female connector, M12, 8-pin, straight Head B: Flying leads Cable: PUR, halogen-free, shielded, 5 m	YF2A68-050XXXXLEAX	6032449
	• **Connection type head A:** Male connector, M12, 4-pin, straight, D-coded • **Connection type head B:** Male connector, RJ45, 8-pin, straight • **Signal type:** PROFINET • **Cable:** 5 m, 4-wire, AWG22, PUR, halogen-free • **Description:** PROFINET, shielded	SSL-2J04-G05MZ	6035389
	Head A: female connector, M12, 8-pin, angled, A-coded	YG2A88-050XXXM2A88	6049328
		YG2A88-C60XXXM2A88	6048801
Reflectors			
	Reflector plate, “diamond grade” reflective tape, 330 mm x 330 mm, base plate material: aluminum, screw connection, Screw-on, 4 hole mounting	PL240DG	1017910
	Reflector plate, “diamond grade” reflective tape, 665 mm x 665 mm, base plate material: aluminum, screw connection, Screw-on, 4 hole mounting	PL560DG	1016806
Terminal and alignment brackets			
	Alignment unit for Dx100, incl. mounting material, steel, zinc coated	BEF-AH-DX100	2058653

chanhvinh.com

SICK AT A GLANCE

SICK is one of the leading manufacturers of intelligent sensors and sensor solutions for industrial applications. A unique range of products and services creates the perfect basis for controlling processes securely and efficiently, protecting individuals from accidents and preventing damage to the environment.

We have extensive experience in a wide range of industries and understand their processes and requirements. With intelligent sensors, we can deliver exactly what our customers need. In application centers in Europe, Asia and North America, system solutions are tested and optimized in accordance with customer specifications. All this makes us a reliable supplier and development partner.

Comprehensive services complete our offering: SICK LifeTime Services provide support throughout the machine life cycle and ensure safety and productivity.

For us, that is "Sensor Intelligence."

WORLDWIDE PRESENCE:

Contacts and other locations –www.sick.com

SICK
Sensor Intelligence.