chanhvinh.com

Product data sheet

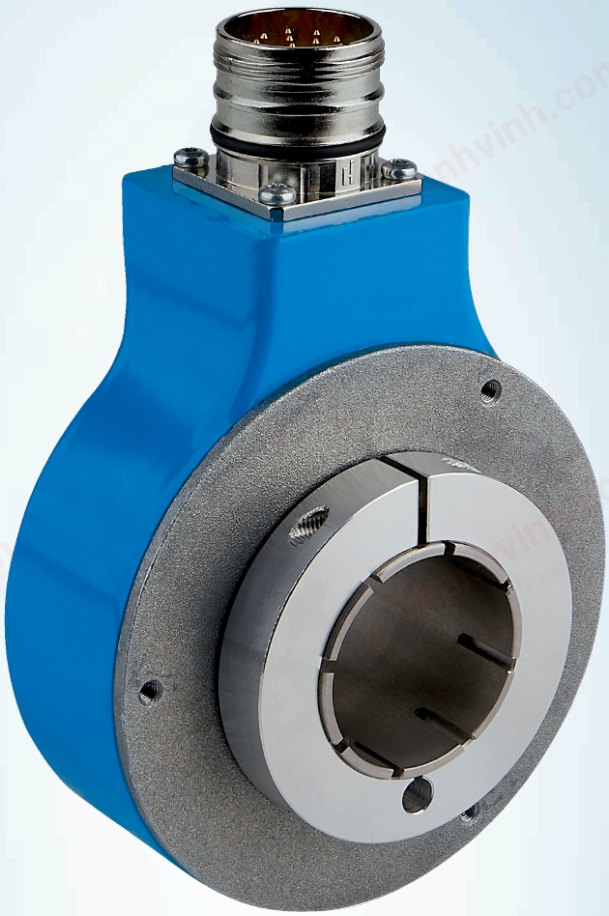

DGS80B-TSLA04096

DGS80

INCREMENTAL ENCODERS

SICK
Sensor Intelligence.

chanhvinh.com

DGS80B-TSLA04096 | DGS80

INCREMENTAL ENCODERS

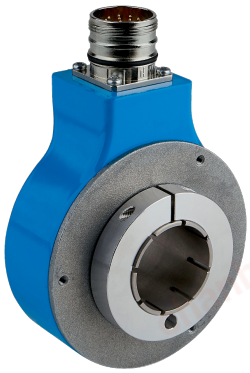

Illustration may differ

Ordering information

Type	Part no.
DGS80B-TSLA04096	1118699

Other models and accessories → www.sick.com/DGS80

Detailed technical data

Performance

Pulses per revolution	4,096
Measuring step	90° electric/pulses per revolution
Measuring step deviation	± 15° electrical
Duty cycle	≤ 0.5 ± 15 %

Interfaces

Communication interface	Incremental
Communication Interface detail	HTL / Push pull
Number of signal channels	6-channel
Initialization time	< 50 ms
Output frequency	≤ 300 kHz
Load current	≤ 40 mA, per channel
Operating current	≤ 50 mA (without load)
Power consumption	≤ 0.85 W

Electrical data

Connection type	Male connector, M23, 12-pin, radial
Supply voltage	4.5 ... 30 V DC
Reference signal, position	90°, electric, logically gated with A and B
Reverse polarity protection	✓
Short-circuit protection of the outputs	✓
MTTFd: mean time to dangerous failure	518 years (EN ISO 13849-1) [1]

[1] This product is a standard product and does not constitute a safety component as defined in the Machinery Directive. Calculation based on nominal load of components, average ambient temperature 40 °C, frequency of use 8760 h/a. All electronic failures are considered hazardous. For more information, see document no. 8015532.

chanhvinh.com

Mechanical data

Mechanical design	Through hollow shaft
Shaft diameter	30 mm [1]
Flange type / stator coupling	1-sided stator coupling with slot available for order as accessory
Weight	650 g
Shaft material	Aluminum
Flange material	ZAMAC die cast
Housing material	ZAMAC die cast
Shaft sealing ring material	FKM70
Start up torque	6 Ncm (+20 °C)
Operating torque	5 Ncm (+20 °C)
Permissible shaft load	100 N
Operating speed	≤ 3,600 min^{-1}
Moment of inertia of the rotor	408 gcm^2
Bearing lifetime	10^9 revolutions

[1] Collets (shaft reducer) available as accessories to reduce shaft sizes under 30 mm / 42 mm.

Ambient data

EMC	According to EN 61000-6-2 and EN 61000-6-3
Enclosure rating	IP65 (IEC 60529)
Permissible relative humidity	98 % (Condensation not permitted)
Operating temperature range	–25 °C ... +85 °C
Storage temperature range	–25 °C ... +85 °C, without package
Resistance to shocks	250 g, 6 ms (EN 60068-2-27)
Resistance to vibration	10 g, 5 Hz ... 2,000 Hz (EN 60068-2-6)

Classifications

eCl@ss 5.0	27270501
eCl@ss 5.1.4	27270501
eCl@ss 6.0	27270590
eCl@ss 6.2	27270590
eCl@ss 7.0	27270501
eCl@ss 8.0	27270501
eCl@ss 8.1	27270501
eCl@ss 9.0	27270501
eCl@ss 10.0	27270501
eCl@ss 11.0	27270501
eCl@ss 12.0	27270501
ETIM 5.0	EC001486
ETIM 6.0	EC001486
ETIM 7.0	EC001486
ETIM 8.0	EC001486
UNSPSC 16.0901	41112113

Dimensional drawing (Dimensions in mm (inch))

Bore hole size 30 mm, M23 male connector

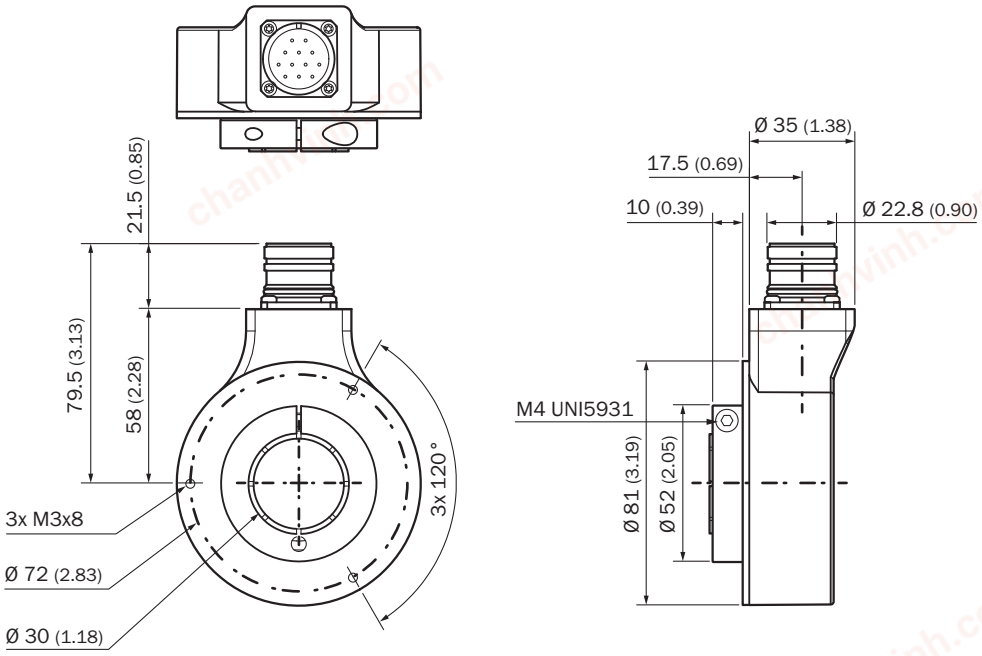

PIN assignment

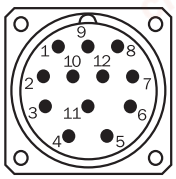

Wire colors (cable connection)	PIN Male connector M12, 8-pin	PIN Male connector M23, 12-pin	PIN MS male connector, 10-pin	Signal	Explanation
Brown	1	6	H	A-	Signal cable
White	2	5	A	A	Signal cable
Black	3	1	I	B-	Signal cable
Pink	4	8	B	B	Signal cable
Yellow	5	4	J	Z-	Signal cable
Purple	6	3	C	Z	Signal cable
Blue	7	10	F	GND	Ground connection
Red	8	12	D	$+U_S$	Supply voltage
-	-	2	E	N.c.	Not connected
-	-	7	-	N.c.	Not connected
-	-	-	G	Housing	Housing
-	-	9	-	N.c.	Not connected
-	-	11	-	N.c.	Not connected

chanhvinh.com

Wire colors (cable connection)	PIN Male connector M12, 8-pin	PIN Male connector M23, 12-pin	PIN MS male connector, 10-pin	Signal	Explanation
Screen				Screen	Screen connected to housing on encoder side

Recommended accessories

Other models and accessories ➜ www.sick.com/DGS80

	Brief description	Type	Part no.
Flanges			
	1-sided stator coupling, slot, 115 mm, stainless steel 1.4301 (AISI 304), 1 x stator coupling, 3 x M3 screws, 1 x insulating washer for stator coupling	DGS80-TETHER-A	2122697
	1-sided stator coupling, slot, 84 mm, stainless steel 1.4301 (AISI 304), 1 x stator coupling, 3 x M3 screws, 1 x insulating washer for stator coupling	DGS80-TETHER-B	2122698
Plug connectors and cables			
	Head A: female connector, M23, 12-pin, straight Head B: Flying leads Cable: Incremental, PUR, shielded, 2 m	DOL-2312-G02MLA3	2030682
	Head A: female connector, M23, 12-pin, straight Head B: Flying leads Cable: Incremental, PUR, halogen-free, shielded, 3 m	DOL-2312-G03MMA3	2029213
	Head A: female connector, M23, 12-pin, straight Head B: Flying leads Cable: Incremental, PUR, halogen-free, shielded, 5 m	DOL-2312-G05MMA3	2029214
	Head A: female connector, M23, 12-pin, straight Head B: Flying leads Cable: Incremental, PUR, shielded, 7 m	DOL-2312-G07MLA3	2030685
	Head A: female connector, M23, 12-pin, straight Head B: Flying leads Cable: Incremental, PUR, shielded, 10 m	DOL-2312-G10MLA3	2030688
	Head A: female connector, M23, 12-pin, straight Head B: Flying leads Cable: Incremental, PUR, halogen-free, shielded, 10 m	DOL-2312-G10MMA3	2029215
	Head A: female connector, M23, 12-pin, straight Head B: Flying leads Cable: Incremental, PUR, shielded, 15 m	DOL-2312-G15MLA3	2030692
	Head A: female connector, M23, 12-pin, straight Head B: Flying leads Cable: Incremental, PUR, halogen-free, shielded, 1.5 m	DOL-2312-G1M5MA3	2029212
	Head A: female connector, M23, 12-pin, straight Head B: Flying leads Cable: Incremental, PUR, shielded, 20 m	DOL-2312-G20MLA3	2030695
	Head A: female connector, M23, 12-pin, straight Head B: Flying leads Cable: Incremental, PUR, halogen-free, shielded, 20 m	DOL-2312-G20MMA3	2029216

chanhvinh.com

DGS80B-TSLA04096 | DGS80

INCREMENTAL ENCODERS

	Brief description	Type	Part no.
	Head A: female connector, M23, 12-pin, straight Head B: Flying leads Cable: Incremental, PUR, shielded, 25 m	DOL-2312-G25MLA3	2030699
	Head A: female connector, M23, 12-pin, straight Head B: Flying leads Cable: Incremental, PUR, shielded, 30 m	DOL-2312-G30MLA3	2030702
	Head A: female connector, M23, 12-pin, straight Head B: Flying leads Cable: Incremental, PUR, halogen-free, shielded, 30 m	DOL-2312-G30MMA3	2029217
	Head A: female connector, M23, 12-pin, straight Cable: HIPERFACE®, SSI, Incremental, shielded	DOS-2312-G02	2077057
	Head A: female connector, M23, 12-pin, angled Cable: HIPERFACE®, SSI, Incremental, shielded	DOS-2312-W01	2072580
Shaft adaptation			
	Collet for through hollow shaft, shaft diameter 16 mm, external diameter 30 mm	SPZ-030-016-M	2123016
	Collet for through hollow shaft, shaft diameter 18 mm, external diameter 30 mm	SPZ-030-018-M	2123017
	Collet for through hollow shaft, shaft diameter 1”, external diameter 30 mm	SPZ-030-01Z-M	2123015
	Collet for through hollow shaft, shaft diameter 20 mm, external diameter 30 mm	SPZ-030-020-M	2123018
	Collet for through hollow shaft, shaft diameter 24 mm, external diameter 30 mm	SPZ-030-024-M	2123019
	Collet for through hollow shaft, shaft diameter 25 mm, external diameter 30 mm	SPZ-030-025-M	2123020
	Collet for through hollow shaft, shaft diameter 28 mm, external diameter 30 mm	SPZ-030-028-M	2123021
	Collet for through hollow shaft, shaft diameter 3/4”, external diameter 30 mm	SPZ-030-034Z-M	2123014
	Collet for through hollow shaft, shaft diameter 5/8”, external diameter 30 mm	SPZ-030-058Z-M	2123013

chanhvinh.com

SICK AT A GLANCE

SICK is one of the leading manufacturers of intelligent sensors and sensor solutions for industrial applications. A unique range of products and services creates the perfect basis for controlling processes securely and efficiently, protecting individuals from accidents and preventing damage to the environment.

We have extensive experience in a wide range of industries and understand their processes and requirements. With intelligent sensors, we can deliver exactly what our customers need. In application centers in Europe, Asia and North America, system solutions are tested and optimized in accordance with customer specifications. All this makes us a reliable supplier and development partner.

Comprehensive services complete our offering: SICK LifeTime Services provide support throughout the machine life cycle and ensure safety and productivity.

For us, that is "Sensor Intelligence."

WORLDWIDE PRESENCE:

Contacts and other locations –www.sick.com

SICK
Sensor Intelligence.