chanhvinh.com

Product data sheet

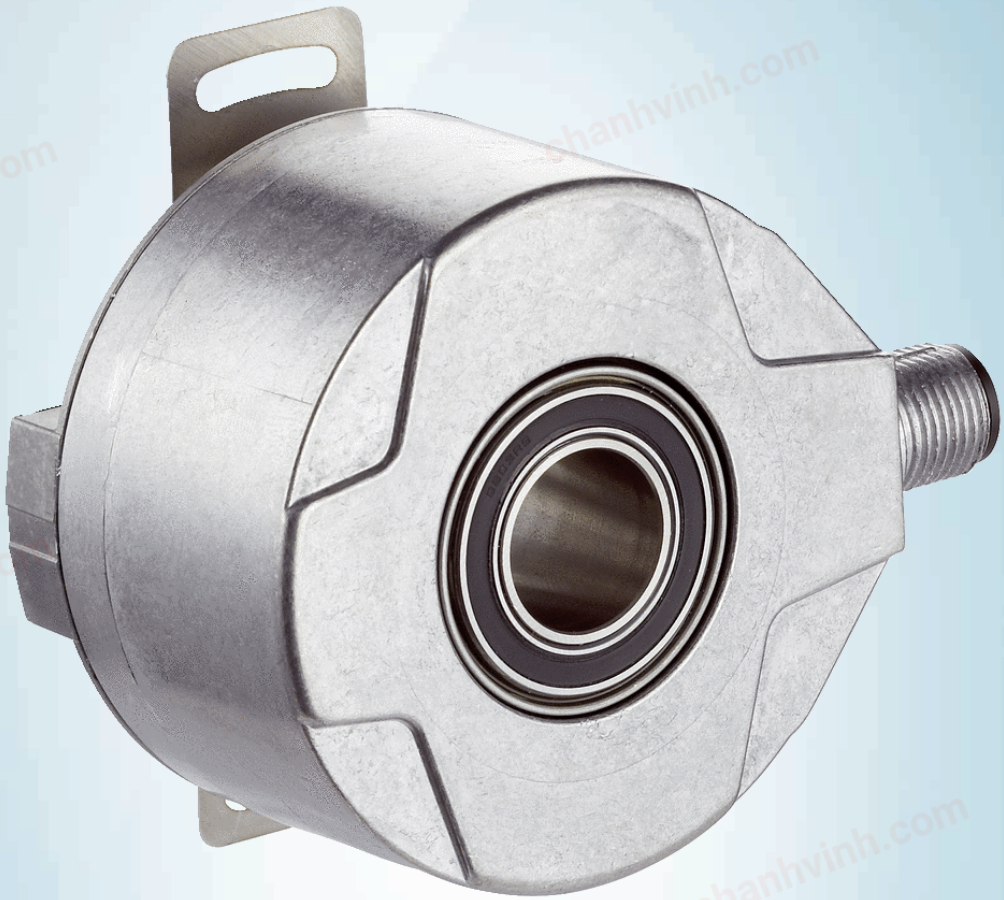

DFS60B-TBPC10000

DFS60

INCREMENTAL ENCODERS

SICK
Sensor Intelligence.

chanhvinh.com

DFS60B-TBPC10000 | DFS60

INCREMENTAL ENCODERS



Illustration may differ

Ordering information

Type	Part no.
DFS60B-TBPC10000	1036913

Other models and accessories → www.sick.com/DFS60

Detailed technical data

Performance

Pulses per revolution	10,000 [1]
Measuring step	90° electric/pulses per revolution
Measuring step deviation at non binary number of lines	± 0.01°
Error limits	± 0.05°

[1] See maximum revolution range.

Interfaces

Communication interface	Incremental
Communication Interface detail	TTL / HTL
Factory setting	Factory setting: output level TTL
Number of signal channels	6-channel
Programmable/configurable	✓
Initialization time	32 ms [1] 30 ms
Output frequency	≤ 600 kHz
Load current	≤ 30 mA
Power consumption	≤ 0.7 W (without load)

[1] With mechanical zero pulse width.

Electrical data

Connection type	Male connector, M12, 8-pin, radial
Supply voltage	4.5 ... 32 V
Reference signal, number	1
Reference signal, position	90°, electric, logically gated with A and B

[1] Programming TTL with ≥ 5.5 V: short-circuit opposite to another channel or GND permissable for maximum 30 s.

[2] Programming HTL or TTL with < 5.5 V: short-circuit opposite to another channel, US or GND permissable for maximum 30 s.

[3] This product is a standard product and does not constitute a safety component as defined in the Machinery Directive. Calculation based on nominal load of components, average ambient temperature 40 °C, frequency of use 8760 h/a. All electronic failures are considered hazardous. For more information, see document no. 8015532.

chanhvinh.com

Reverse polarity protection	✓
Short-circuit protection of the outputs	✓ [1) 2)]
MTTFd: mean time to dangerous failure	300 years (EN ISO 13849-1) [3)]

[1)] Programming TTL with ≥ 5.5 V: short-circuit opposite to another channel or GND permissable for maximum 30 s.

[2)] Programming HTL or TTL with < 5.5 V: short-circuit opposite to another channel, US or GND permissable for maximum 30 s.

[3)] This product is a standard product and does not constitute a safety component as defined in the Machinery Directive. Calculation based on nominal load of components, average ambient temperature 40 °C, frequency of use 8760 h/a. All electronic failures are considered hazardous. For more information, see document no. 8015532.

Mechanical data

Mechanical design	Through hollow shaft
Shaft diameter	8 mm
Weight	+ 0.2 kg
Shaft material	Stainless steel
Flange material	Aluminum
Housing material	Aluminum die cast
Start up torque	0.8 Ncm (+20 °C)
Operating torque	0.6 Ncm (+20 °C)
Permissible movement static	± 0.3 mm (radial) ± 0.5 mm (axial)
Permissible movement dynamic	± 0.2 mm (radial) ± 0.1 mm (axial)
Operating speed	≤ 6,000 min^{-1} [1)]
Moment of inertia of the rotor	40 gcm^2
Bearing lifetime	3.6 x 10^10 revolutions
Angular acceleration	≤ 500,000 rad/s^2

[1)] Allow for self-heating of 3.3 K per 1,000 rpm when designing the operating temperature range.

Ambient data

EMC	According to EN 61000-6-2 and EN 61000-6-3
Enclosure rating	IP65, Housing side, male connector (IEC 60529) [1)] IP65, shaft side (IEC 60529)
Permissible relative humidity	90 % (Condensation not permitted)
Operating temperature range	–40 °C ... +100 °C [2)] –30 °C ... +100 °C [3)]
Storage temperature range	–40 °C ... +100 °C, without package
Resistance to shocks	70 g, 6 ms (EN 60068-2-27)
Resistance to vibration	30 g, 10 Hz ... 2,000 Hz (EN 60068-2-6)

[1)] With mating connector fitted.

[2)] Stationary position of the cable.

[3)] Flexible position of the cable.

Classifications

ECl@ss 5.0	27270501
ECl@ss 5.1.4	27270501
ECl@ss 6.0	27270590

ECl@ss 6.2	27270590
ECl@ss 7.0	27270501
ECl@ss 8.0	27270501
ECl@ss 8.1	27270501
ECl@ss 9.0	27270501
ECl@ss 10.0	27270501
ECl@ss 11.0	27270501
ECl@ss 12.0	27270501
ETIM 5.0	EC001486
ETIM 6.0	EC001486
ETIM 7.0	EC001486
ETIM 8.0	EC001486
UNSPSC 16.0901	41112113

PIN assignment

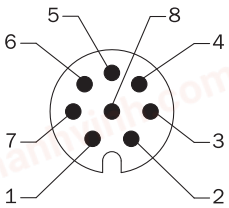

View of M12 male device connector on encoder

PIN Male connector M12, 8-pin	PIN Male connector M23, 12-pin	Wire colors (cable connection)	TTL/HTL signal	Sin/Cos 1.0 V_{PP}	Explanation
1	6	Brown	$\overline{A}$	COS-	Signal wire
2	5	White	A	COS+	Signal wire
3	1	Black	$\overline{B}$	SIN-	Signal wire
4	8	Pink	B	SIN+	Signal wire
5	4	Yellow	$\overline{Z}$	$\overline{Z}$	Signal wire
6	3	Purple	Z	Z	Signal wire
7	10	Blue	GND	GND	Ground connection
8	12	Red	$+U_S$	$+U_S$	Supply voltage
-	9	-	N.c.	N.c.	Not assigned
-	2	-	N.c.	N.c.	Not assigned
-	11	-	N.c.	N.c.	Not assigned
-	7 [1]	-	0-SET [1]	N.c.	Set zero pulse [1]
Screen	Screen	Screen	Screen	Screen	Screen connected to housing on encoder side. Connected to ground on control side.

[1]

chanhvinh.com

PIN Male connector M12, 8-pin	PIN Male connector M23, 12-pin	Wire colors (cable connection)	TTL/HTL signal	Sin/Cos 1.0 V_{PP}	Explanation
For electrical interfaces only: M, U, V, W with 0-SET function on PIN 7 on M23 plug. The 0-SET input is used to set the zero pulse to the current shaft position. If the 0-SET input is applied to US for longer than 250 ms after it has previously been open or applied to GND for at least 1,000 ms, the current shaft position is assigned zero pulse signal “Z”.					

Diagrams

Mechanical zero pulse width 1° to 359° programmable. Width of the zero pulse in relation to a mechanical revolution of the shaft.

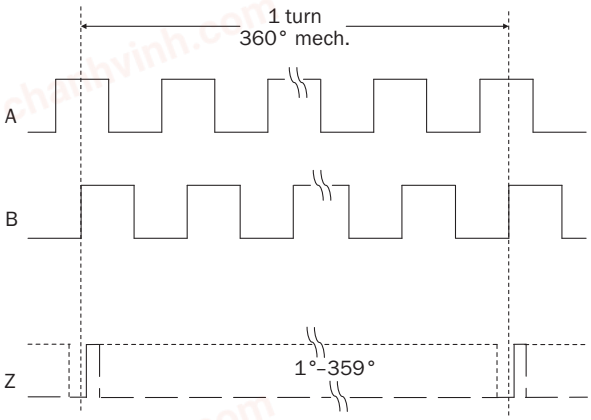

Supply voltage	Output
4,5 V ... 32 V	TTL/HTL programmable

Electrical zero pulse width can be configured to 90°, 180°, or 270°. Width of the zero pulse in relation to a pulse period.

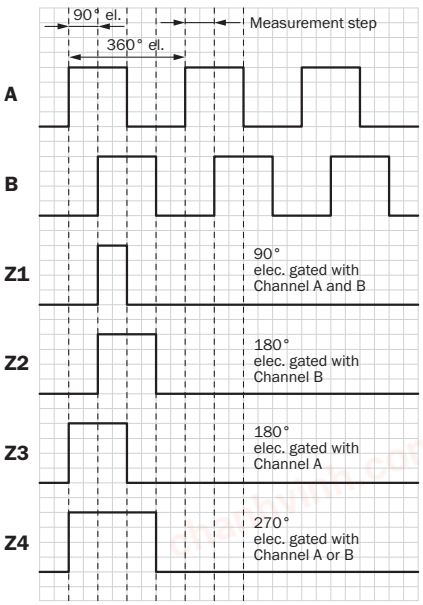

Cw with view on the encoder shaft in direction "A", compare dimensional drawing.

Supply voltage	Output
4,5 V ... 32 V	TTL/HTL programmable

chanhvinh.com

Maximum revolution range

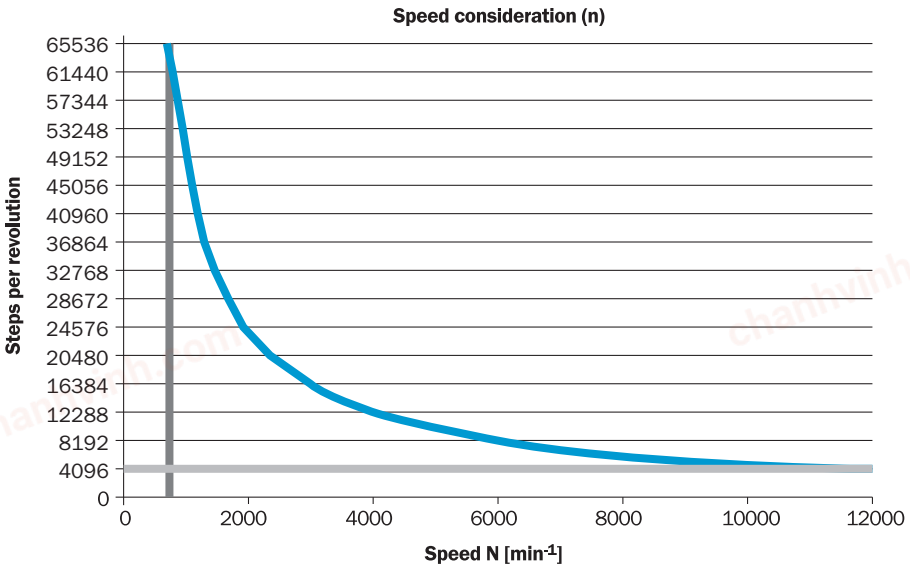

Recommended accessories

Other models and accessories ➜ www.sick.com/DFS60

	Brief description	Type	Part no.
Programming and configuration tools			
	USB programming unit, for programmable SICK encoders AFS60, AFM60, DFS60, VFS60, DFV60 and wire draw encoders with programmable encoders	PGT-08-S	1036616
	Programming unit display for programmable SICK DFS60, DFV60, AFS/AFM60, AHS/AHM36 encoders, and wire draw encoder with DFS60, AFS/AFM60 and AHS/AHM36. Compact dimensions, low weight, and intuitive operation.	PGT-10-Pro	1072254
Flanges			
	Standard stator coupling	BEF-DS00XFX	2056812
Other mounting accessories			
	Clamping ring for metal hollow shaft⅛, metal	BEF-KR-M	2064709
Plug connectors and cables			
	Head A: female connector, M12, 8-pin, straight Head B: Flying leads Cable: Incremental, SSI, PUR, halogen-free, shielded, 2 m	DOL-1208-G02MAC1	6032866
	Head A: female connector, M12, 8-pin, straight Head B: Flying leads Cable: Incremental, SSI, PUR, halogen-free, shielded, 5 m	DOL-1208-G05MAC1	6032867
	Head A: female connector, M12, 8-pin, straight Head B: Flying leads Cable: Incremental, SSI, PUR, halogen-free, shielded, 10 m	DOL-1208-G10MAC1	6032868

chanhvinh.com

	Brief description	Type	Part no.
	Head A: female connector, M12, 8-pin, straight Head B: Flying leads Cable: Incremental, SSI, PUR, halogen-free, shielded, 20 m	DOL-1208-G20MAC1	6032869
	Head A: female connector, M12, 8-pin, straight Head B: male connector, D-Sub, 9-pin, straight Cable: Incremental, shielded, 0.5 m Programming adapter cable for programming tool PGT-10-Pro and PGT-08-S	DSL-2D08-G0M5AC3	2046579
	Head A: female connector, M12, 8-pin, straight, A-coded Cable: Incremental, SSI, shielded	DOS-1208-GA01	6045001

chanhvinh.com

chanhvinh.com

SICK AT A GLANCE

SICK is one of the leading manufacturers of intelligent sensors and sensor solutions for industrial applications. A unique range of products and services creates the perfect basis for controlling processes securely and efficiently, protecting individuals from accidents and preventing damage to the environment.

We have extensive experience in a wide range of industries and understand their processes and requirements. With intelligent sensors, we can deliver exactly what our customers need. In application centers in Europe, Asia and North America, system solutions are tested and optimized in accordance with customer specifications. All this makes us a reliable supplier and development partner.

Comprehensive services complete our offering: SICK LifeTime Services provide support throughout the machine life cycle and ensure safety and productivity.

For us, that is "Sensor Intelligence."

WORLDWIDE PRESENCE:

Contacts and other locations –www.sick.com