chanhvinh.com

Product data sheet

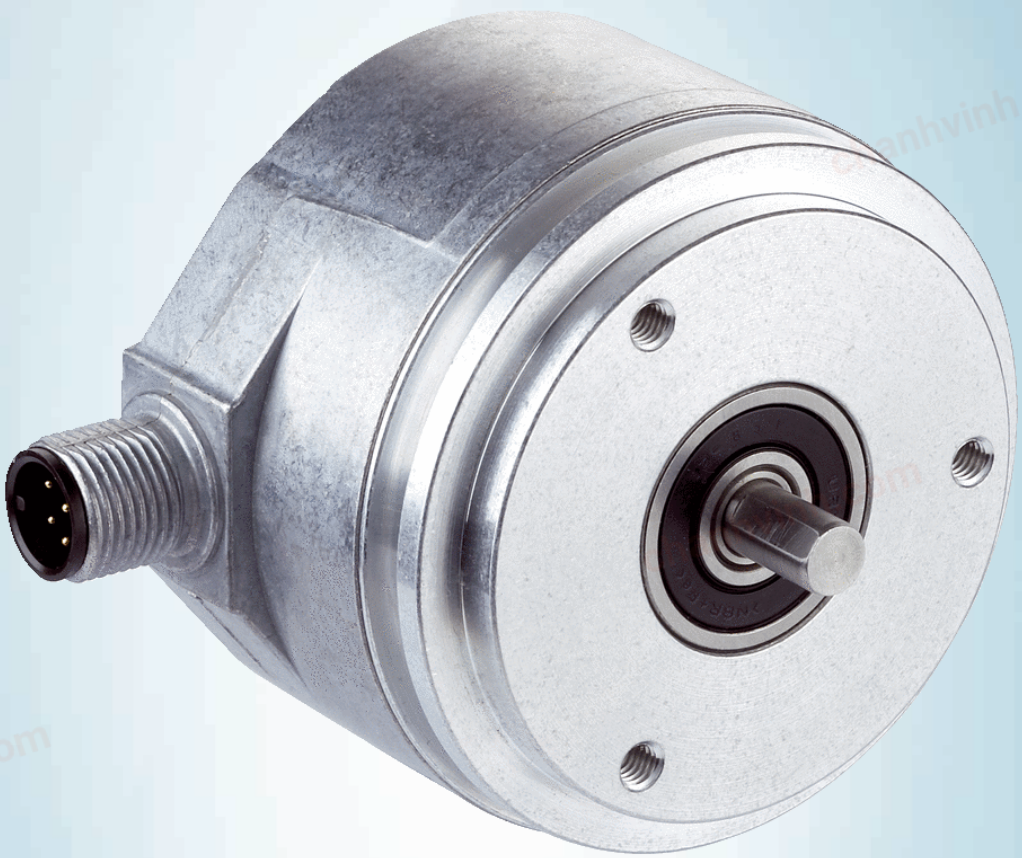

DFS60B-S1PC10000

DFS60

INCREMENTAL ENCODERS

SICK
Sensor Intelligence.

chanhvinh.com

DFS60B-S1PC10000 | DFS60

INCREMENTAL ENCODERS



Illustration may differ

Ordering information

Type	Part no.
DFS60B-S1PC10000	1036756

Other models and accessories → www.sick.com/DFS60

Detailed technical data

Performance

Pulses per revolution	10,000 [1]
Measuring step	90° electric/pulses per revolution
Measuring step deviation at non binary number of lines	± 0.01°
Error limits	± 0.05°

[1] See maximum revolution range.

Interfaces

Communication interface	Incremental
Communication Interface detail	TTL / HTL
Factory setting	Factory setting: output level TTL
Number of signal channels	6-channel
Programmable/configurable	✓
Initialization time	32 ms [1] 30 ms
Output frequency	≤ 600 kHz
Load current	≤ 30 mA
Power consumption	≤ 0.7 W (without load)

[1] With mechanical zero pulse width.

Electrical data

Connection type	Male connector, M12, 8-pin, radial
Supply voltage	4.5 ... 32 V
Reference signal, number	1
Reference signal, position	90°, electric, logically gated with A and B
Reverse polarity protection	✓

[1] Programming TTL with ≥ 5.5 V: short-circuit opposite to another channel or GND permissable for maximum 30 s.

[2] Programming HTL or TTL with < 5.5 V: short-circuit opposite to another channel, US or GND permissable for maximum 30 s.

[3] This product is a standard product and does not constitute a safety component as defined in the Machinery Directive. Calculation based on nominal load of components, average ambient temperature 40 °C, frequency of use 8760 h/a. All electronic failures are considered hazardous. For more information, see document no. 8015532.

chanhvinh.com

Short-circuit protection of the outputs	✓ [1] [2]
MTTFd: mean time to dangerous failure	300 years (EN ISO 13849-1) [3]

[1] Programming TTL with ≥ 5.5 V: short-circuit opposite to another channel or GND permissable for maximum 30 s.
[2] Programming HTL or TTL with < 5.5 V: short-circuit opposite to another channel, US or GND permissable for maximum 30 s.
[3] This product is a standard product and does not constitute a safety component as defined in the Machinery Directive. Calculation based on nominal load of components, average ambient temperature 40 °C, frequency of use 8760 h/a. All electronic failures are considered hazardous. For more information, see document no. 8015532.

Mechanical data

Mechanical design	Solid shaft, Servo flange
Shaft diameter	6 mm
Wavelength	10 mm
Weight	+ 0.3 kg
Shaft material	Stainless steel
Flange material	Aluminum
Housing material	Aluminum die cast
Start up torque	0.5 Ncm (+20 °C)
Operating torque	0.3 Ncm (+20 °C)
Permissible shaft loading radial/axial	80 N (radial) 40 N (axial)
Operating speed	≤ 9,000 min^{-1} [1]
Moment of inertia of the rotor	6.2 gcm^2
Bearing lifetime	3.6 x 10^10 revolutions
Angular acceleration	≤ 500,000 rad/s^2

[1] Allow for self-heating of 3.3 K per 1,000 rpm when designing the operating temperature range.

Ambient data

EMC	According to EN 61000-6-2 and EN 61000-6-3
Enclosure rating	IP67, housing side, male connector (according to IEC 60529) [1] IP65, shaft side (according to IEC 60529)
Permissible relative humidity	90 % (condensation of the optical scanning not permitted)
Operating temperature range	–40 °C ... +100 °C [2] –30 °C ... +100 °C [3]
Storage temperature range	–40 °C ... +100 °C, without package
Resistance to shocks	70 g, 6 ms (according to EN 60068-2-27)
Resistance to vibration	30 g, 10 Hz ... 2,000 Hz (according to EN 60068-2-6)

[1] With mating connector fitted.
[2] Stationary position of the cable.
[3] Flexible position of the cable.

Classifications

ECl@ss 5.0	27270501
ECl@ss 5.1.4	27270501
ECl@ss 6.0	27270590
ECl@ss 6.2	27270590
ECl@ss 7.0	27270501

DFS60B-S1PC10000 | DFS60

INCREMENTAL ENCODERS

ECl@ss 8.0	27270501
ECl@ss 8.1	27270501
ECl@ss 9.0	27270501
ECl@ss 10.0	27270501
ECl@ss 11.0	27270501
ETIM 5.0	EC001486
ETIM 6.0	EC001486
ETIM 7.0	EC001486
UNSPSC 16.0901	41112113

Dimensional drawing (Dimensions in mm (inch))

Servo flange, radial male connector M12 and M23

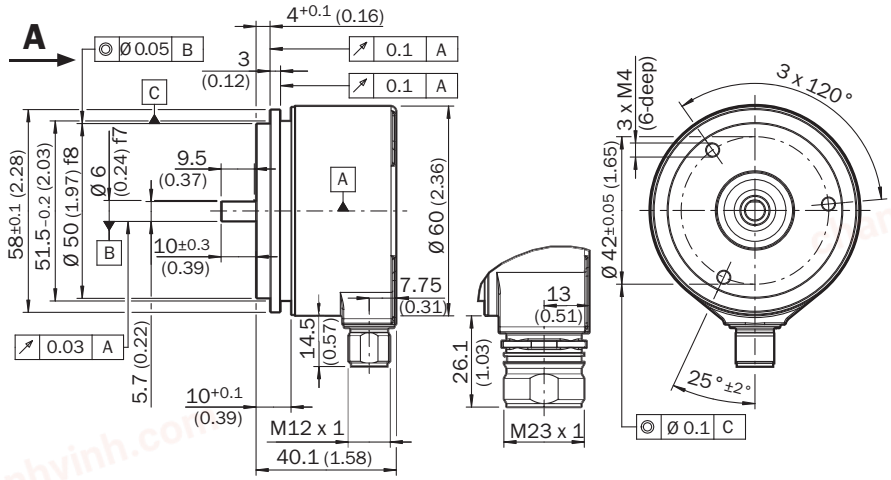

General tolerances according to DIN ISO 2768-mk

Attachment specifications

Mounting requirements for small servo clamp

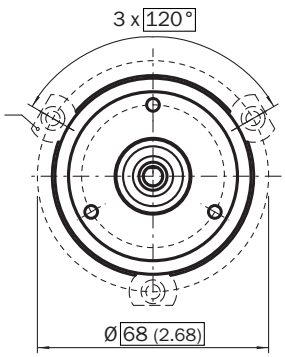

All dimensions in mm (inch)

Part no. 2029166

chanhvinh.com

Mounting requirements for half-shell servo clamp

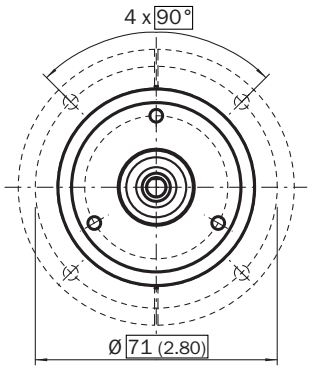

All dimensions in mm (inch)

Part no. 2029165

PIN assignment

Cable, 8-wire

View of M12 male device connector on encoder

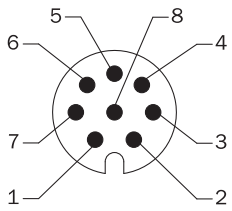

View of M23 male device connector on encoder

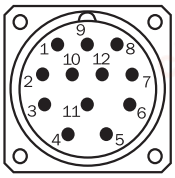

PIN, 8-pin, M12 male connector	PIN, 12-pin, M23 male connector	Color of the wires for encoders with cable outlet	TTL/HTL signal	Sin/cos 1.0 V_{ss}	Explanation
1	6	Brown	$\overline{A}$	COS–	Signal wire
2	5	White	A	COS+	Signal wire
3	1	Black	$\overline{B}$	SIN–	Signal wire
4	8	Pink	B	SIN+	Signal wire
5	4	Yellow	$\overline{Z}$	$\overline{Z}$	Signal wire
6	3	Violet	Z	Z	Signal wire
7	10	Blue	GND	GND	Ground connection of the encoder
8	12	Red	$+U_S$	$+U_S$	Supply voltage (volt-free to housing)
–	9	–	n.c.	n.c.	Not assigned
–	2	–	n.c.	n.c.	Not assigned
–	11	–	n.c.	n.c.	Not assigned
–	7 [1]	–	0-SET [1]	n.c.	Set zero pulse [1]
Screen	Screen	Screen	Screen	Screen	Screen connected to housing on encoder side. Connected to ground on control side.

[1] For electrical interfaces only: M, U, V, W with 0-SET function on PIN 7 on M23 male connector. The 0-SET input is used to set the zero pulse on the current shaft position. If the 0-SET input is connected to U_S for longer than 250 ms after it had previously been unassigned for at least 1,000 ms or had been connected to the GND, the current position of the shaft is assigned to the zero pulse signal “Z”.

Maximum revolution range

Maximum revolution range

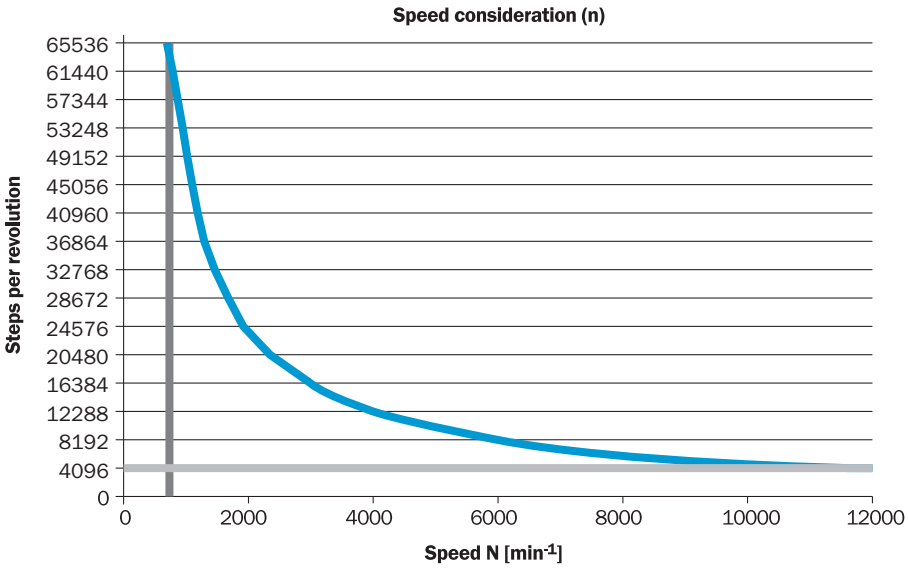

Diagrams

Electrical zero pulse width can be configured to 90°, 180°, or 270°. Width of the zero pulse in relation to a pulse period.

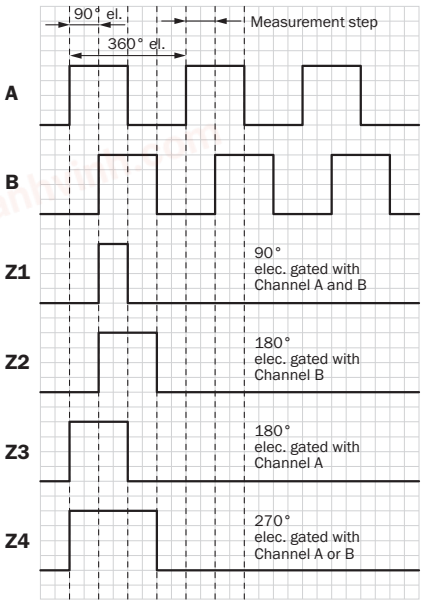

Cw with view on the encoder shaft in direction "A", compare dimensional drawing.

chanhvinh.com

Mechanical zero pulse width 1° to 359° programmable. Width of the zero pulse in relation to a mechanical revolution of the shaft.

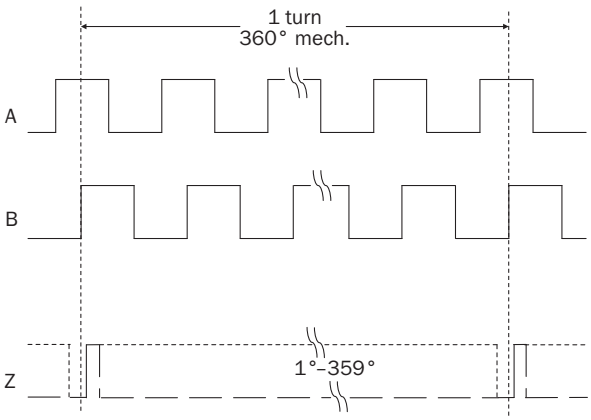

Recommended accessories

Other models and accessories ➜ www.sick.com/DFS60

	Brief description	Type	Part no.
Other mounting accessories			
	Aluminium measuring wheel with O-ring (NBR70) for 6 mm solid shaft, circumference 200 mm	BEF-MR006020R	2055222
	Measuring wheel with O-ring (NBR70) for 6 mm solid shaft, circumference 300 mm	BEF-MR006030R	2055634
	Aluminium measuring wheel with O-ring (NBR70) for 6 mm solid shaft, circumference 500 mm	BEF-MR006050R	2055225
	Aluminum measuring wheel with cross-knurled surface for 6 mm solid shaft, circumference 200 mm	BEF-MR06200AK	4084745
	Aluminum measuring wheel with smooth polyurethane surface for 6 mm solid shaft, circumference 200 mm	BEF-MR06200AP	4084746
	Aluminum measuring wheel with ridged polyurethane surface for 6 mm solid shaft, circumference 200 mm	BEF-MR06200APG	4084748
	Aluminum measuring wheel with studded polyurethane surface for 6 mm solid shaft, circumference 200 mm	BEF-MR06200APN	4084747
	Mounting bell for encoder with servo flange, 50 mm spigot, mounting kit included	BEF-MG-50	5312987
	Bearing block for servo and face mount flange encoder. The heavy-duty bearing block is used to absorb very large radial and axial shaft loads. Particularly when using belt pulleys, chain sprockets, friction wheels. Operating speed max. 4,000 rpm^-1, axial shaft load 150 N, radial shaft load 250 N, bearing service life 3.6 x 10^9 revolutions	BEF-FA-LB1210	2044591
	Mounting kit for servo flange encoder on the bearing block, 1 bar coupling SKPS 1520 06/06 1 hexagon socket wrench SW1.5 DIN 911, 3 mounting eccentric BEMN 1242 49 3 screws M4 x 10 DIN 912,1 hexagon socket wrench SW3 DIN 911, 1 bar coupling SKPS 1520 06/06 1 hexagon socket wrench SW1.5 DIN 911, 3 mounting eccentric BEMN 1242 49 3 screws M4 x 10 DIN 912, 1 hexagon socket wrench SW3 DIN 911	BEF-MK-LB	5320872

DFS60B-S1PC10000 | DFS60

INCREMENTAL ENCODERS

	Brief description	Type	Part no.
	Servo clamps, large, for servo flanges (clamps, eccentric fastener), 3 pcs., without mounting material, without mounting hardware	BEF-WK-SF	2029166
Shaft adaptation			
	Bellows coupling, shaft diameter 6 mm / 6 mm, maximum shaft offset: radial ± 0.25 mm, axial ± 0.4 mm, angular +/- 4°; max. speed 10,000 rpm, –30 °C to +120 °C, max. torque 80 Ncm; material: stainless steel bellows, aluminum hub	KUP-0606-B	5312981
	Bar coupling, shaft diameter 6 mm / 6 mm, maximum shaft offset: radial ± 0.3 mm, axial ± 0.2 mm, angle ± 3°; max. speed 10,000 rpm, –10° to +80 °C, max. torque 80 Ncm; material: fiber-glass reinforced polyamide, aluminum hub	KUP-0606-S	2056406
	Bar coupling, shaft diameter 6 mm /8 mm, maximum shaft offset radial ± 0.3 mm, axial ± 0.2 mm, angle ± 3°, max. speed 10,000 rpm, torsion spring rigidity 38 Nm/wheel; material: fiber-glass reinforced polyamide, aluminum hub	KUP-0608-S	5314179
	Bellows coupling, shaft diameter 6 mm / 10 mm, maximum shaft offset: radial ± 0.25 mm, axial ± 0.4 mm, angular +/- 4°; max. speed 10,000 rpm, –30 °C to +120 °C, max. torque 80 Ncm; material: stainless steel bellows, aluminum hub	KUP-0610-B	5312982
	Double loop coupling, shaft diameter 6 mm / 10 mm, max. shaft offset: radially +/- 2,5 mm, axially +/-3 mm, angle +/- 10 degrees;max. speed 3.000 rpm, –30 to +80 degrees Celsius, torsional spring stiffness of 25 Nm/rad	KUP-0610-D	5326697
	Spring washer coupling, shaft diameter 6 mm / 10 mm, Maximum shaft offset: radial +/- 0.3 mm, axial +/- 0.4 mm, angular +/- 2.5°; max. speed 12,000 rpm, –10° to +80 °C, max. torque 60 Ncm; material: aluminum flange, glass fiber-reinforced polyamide membrane and hardened steel coupling pin	KUP-0610-F	5312985
	Bar coupling, shaft diameter 6 mm / 10 mm, max. shaft offset: radial ± 0,3 mm, axial ± 0,3 mm, angular ± 3°; max. speed 10.000 rpm, –10° to +80 °C, max. torque: 80 Ncm, material: fiber-glass reinforced polyamide, aluminum hub	KUP-0610-S	2056407
Programming and configuration tools			
	USB programming unit, for programmable SICK encoders AFS60, AFM60, DFS60, VFS60, DFV60 and wire draw encoders with programmable encoders	PGT-08-S	1036616
	Programming unit display for programmable SICK DFS60, DFV60, AFS/AFM60, AHS/AHM36 encoders, and wire draw encoder with DFS60, AFS/AFM60 and AHS/AHM36. Compact dimensions, low weight, and intuitive operation.	PGT-10-Pro	1072254
Plug connectors and cables			
	Head A: female connector, M12, 8-pin, straight Head B: Flying leads Cable: Incremental, SSI, PUR, halogen-free, shielded, 2 m	DOL-1208-G02MAC1	6032866
	Head A: female connector, M12, 8-pin, straight Head B: Flying leads Cable: Incremental, SSI, PUR, halogen-free, shielded, 5 m	DOL-1208-G05MAC1	6032867
	Head A: female connector, M12, 8-pin, straight Head B: Flying leads Cable: Incremental, SSI, PUR, halogen-free, shielded, 10 m	DOL-1208-G10MAC1	6032868
	Head A: female connector, M12, 8-pin, straight Head B: Flying leads Cable: Incremental, SSI, PUR, halogen-free, shielded, 20 m	DOL-1208-G20MAC1	6032869
	Head A: female connector, M12, 8-pin, straight Head B: male connector, D-Sub, 9-pin, straight Cable: Incremental, shielded, 0.5 m Programming adapter cable for programming tool PGT-10-Pro and PGT-08-S	DSL-2D08-G0M5AC3	2046579
	Head A: female connector, M12, 8-pin, straight, A-coded Head B: - Cable: Incremental, SSI, shielded	DOS-1208-GA01	6045001

chanhvinh.com

SICK AT A GLANCE

SICK is one of the leading manufacturers of intelligent sensors and sensor solutions for industrial applications. A unique range of products and services creates the perfect basis for controlling processes securely and efficiently, protecting individuals from accidents and preventing damage to the environment.

We have extensive experience in a wide range of industries and understand their processes and requirements. With intelligent sensors, we can deliver exactly what our customers need. In application centers in Europe, Asia and North America, system solutions are tested and optimized in accordance with customer specifications. All this makes us a reliable supplier and development partner.

Comprehensive services complete our offering: SICK LifeTime Services provide support throughout the machine life cycle and ensure safety and productivity.

For us, that is "Sensor Intelligence."

WORLDWIDE PRESENCE:

Contacts and other locations –www.sick.com