chanhvinh.com

Product data sheet

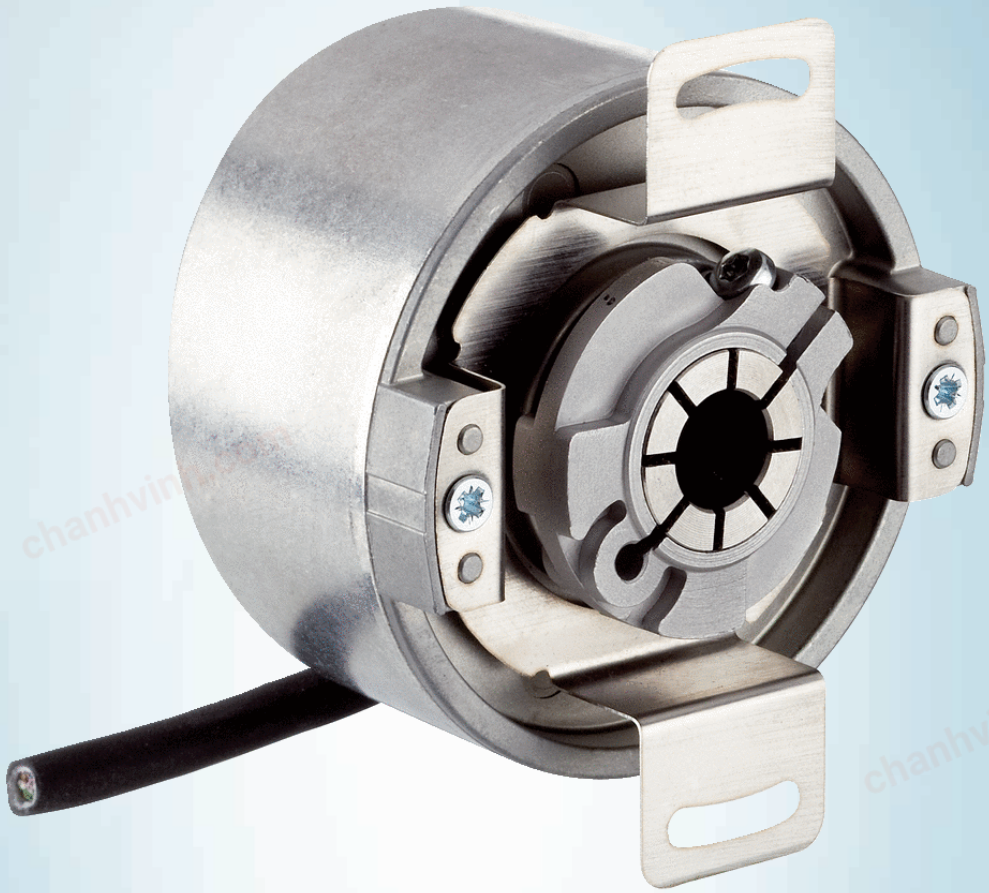

DFS60B-BBNK01024

DFS60

INCREMENTAL ENCODERS

SICK
Sensor Intelligence.

chanhvinh.com

DFS60B-BBNK01024 | DFS60

INCREMENTAL ENCODERS



Illustration may differ

Ordering information

Type	Part no.
DFS60B-BBNK01024	1079748

Other models and accessories → www.sick.com/DFS60

Detailed technical data

Performance

Periods per revolution	1,024
Measuring step	90° electric/pulses per revolution
Measuring step deviation at binary number of lines	± 0.008°
Error limits	± 0.05°

Interfaces

Communication interface	Incremental
Communication Interface detail	Sin/Cos [1]
Number of signal channels	6-channel
Initialization time	40 ms
Output frequency	≤ 200 kHz
Operating current	40 mA (without load)
Load resistance	≤ 120 Ω

[1] 1.0 V_{SS} (differential).

Electrical data

Connection type	Cable, 8-wire, universal, 1.5 m [1]
Supply voltage	4.5 ... 5.5 V
Reference signal, number	1
Reference signal, position	90°, electronically, gated with Sinus and Cosinus
Short-circuit protection of the outputs	✓ [2]
MTTFd: mean time to dangerous failure	300 years (EN ISO 13849-1) [3]

[1] The universal cable connection is positioned so that it is possible to lay it without bends in a radial or axial direction.

[2] Short-circuit opposite to another channel, US or GND permissable for maximum 30 s.

[3] This product is a standard product and does not constitute a safety component as defined in the Machinery Directive. Calculation based on nominal load of components, average ambient temperature 40 °C, frequency of use 8760 h/a. All electronic failures are considered hazardous. For more information, see document no. 8015532.

chanhvinh.com

Mechanical data

Mechanical design	Blind hollow shaft
Shaft diameter	8 mm
Weight	+ 0.2 kg
Shaft material	Stainless steel
Flange material	Aluminum
Housing material	Aluminum die cast
Start up torque	0.8 Ncm (+20 °C)
Operating torque	0.6 Ncm (+20 °C)
Permissible movement static	± 0.3 mm (radial) ± 0.5 mm (axial)
Permissible movement dynamic	± 0.2 mm (radial) ± 0.1 mm (axial)
Operating speed	≤ 6,000 min^{-1} [1]
Moment of inertia of the rotor	40 gcm^2
Bearing lifetime	3.6 x 10^10 revolutions
Angular acceleration	≤ 500,000 rad/s^2

[1] Allow for self-heating of 3.3 K per 1,000 rpm when designing the operating temperature range.

Ambient data

EMC	According to EN 61000-6-2 and EN 61000-6-3
Enclosure rating	IP67, housing side, cable connection (IEC 60529) IP65, shaft side (IEC 60529)
Permissible relative humidity	90 % (Condensation not permitted)
Operating temperature range	–40 °C ... +100 °C [1] –30 °C ... +100 °C [2]
Storage temperature range	–40 °C ... +100 °C, without package
Resistance to shocks	70 g, 6 ms (EN 60068-2-27)
Resistance to vibration	30 g, 10 Hz ... 2,000 Hz (EN 60068-2-6)

[1] Stationary position of the cable.
[2] Flexible position of the cable.

Classifications

ECl@ss 5.0	27270501
ECl@ss 5.1.4	27270501
ECl@ss 6.0	27270590
ECl@ss 6.2	27270590
ECl@ss 7.0	27270501
ECl@ss 8.0	27270501
ECl@ss 8.1	27270501
ECl@ss 9.0	27270501
ECl@ss 10.0	27270501
ECl@ss 11.0	27270501
ECl@ss 12.0	27270501

ETIM 5.0	EC001486
ETIM 6.0	EC001486
ETIM 7.0	EC001486
ETIM 8.0	EC001486
UNSPSC 16.0901	41112113

Dimensional drawing (Dimensions in mm (inch))

Blind hollow shaft, cable

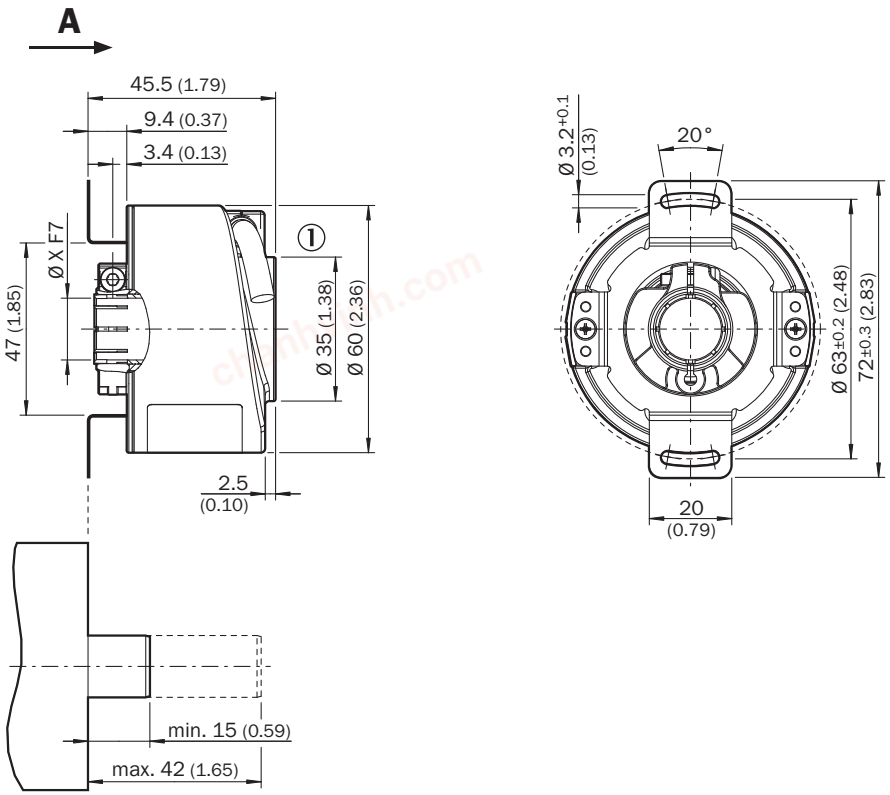

General tolerances according to DIN ISO 2768-mk

① Cable diameter = 5.6 mm +/- 0.2 mm bend radius = 30 mm

PIN assignment

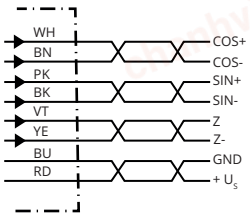

PIN Male connector M12, 8-pin	PIN Male connector M23, 12-pin	Wire colors (cable connection)	TTL/HTL signal	Sin/Cos 1.0 V_{PP}	Explanation
1	6	Brown	$\overline{A}$	COS-	Signal wire

chanhvinh.com

PIN Male connector M12, 8-pin	PIN Male connector M23, 12-pin	Wire colors (cable connection)	TTL/HTL signal	Sin/Cos 1.0 V_{PP}	Explanation
2	5	White	A	COS+	Signal wire
3	1	Black	$\overline{B}$	SIN-	Signal wire
4	8	Pink	B	SIN+	Signal wire
5	4	Yellow	$\overline{Z}$	$\overline{Z}$	Signal wire
6	3	Purple	Z	Z	Signal wire
7	10	Blue	GND	GND	Ground connection
8	12	Red	$+U_S$	$+U_S$	Supply voltage
-	9	-	N.c.	N.c.	Not assigned
-	2	-	N.c.	N.c.	Not assigned
-	11	-	N.c.	N.c.	Not assigned
-	7 [1]	-	0-SET [1]	N.c.	Set zero pulse [1]
Screen	Screen	Screen	Screen	Screen	Screen connected to housing on encoder side. Connected to ground on control side.

[1] For electrical interfaces only: M, U, V, W with 0-SET function on PIN 7 on M23 plug. The 0-SET input is used to set the zero pulse to the current shaft position. If the 0-SET input is applied to US for longer than 250 ms after it has previously been open or applied to GND for at least 1,000 ms, the current shaft position is assigned zero pulse signal “Z”.

Diagrams

Signal SIN/COS before differential generation

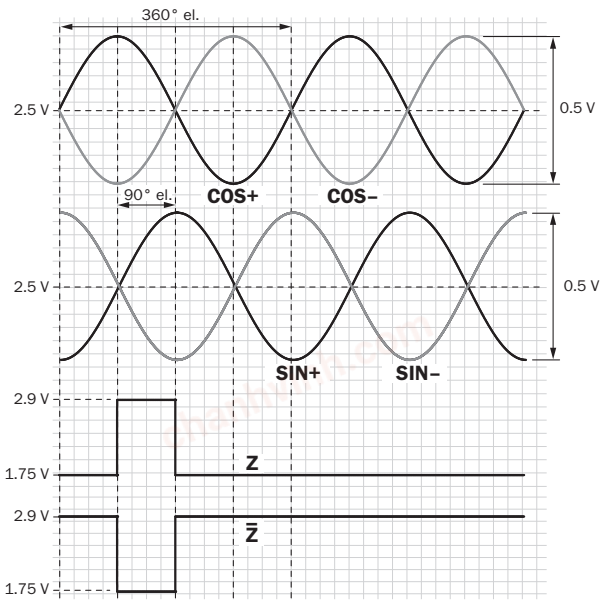

For clockwise shaft rotation, looking in direction “A” (see dimensional drawing)

Signal	Interface signals	Signal before differential generation At load 120 Ω	Signal offset
+ SIN - SIN + COS - COS	Analog, differential	0,5 V_{SS} ± 20 %	2,5 V ± 10 %
Z Z_	Digital differential	Low: 1,75 V ± 15 %, High: 2,90 V ± 15 %	

Signal SIN/COS after differential generation

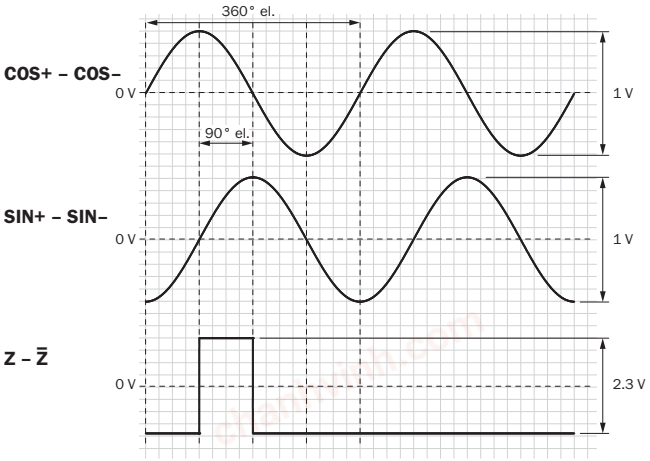

For clockwise shaft rotation, looking in direction “A” (see dimensional drawing)

Supply voltage	Output
4,5 V ... 5,5 V	Sin/Cos 1.0 V_{PP}

Maximum revolution range

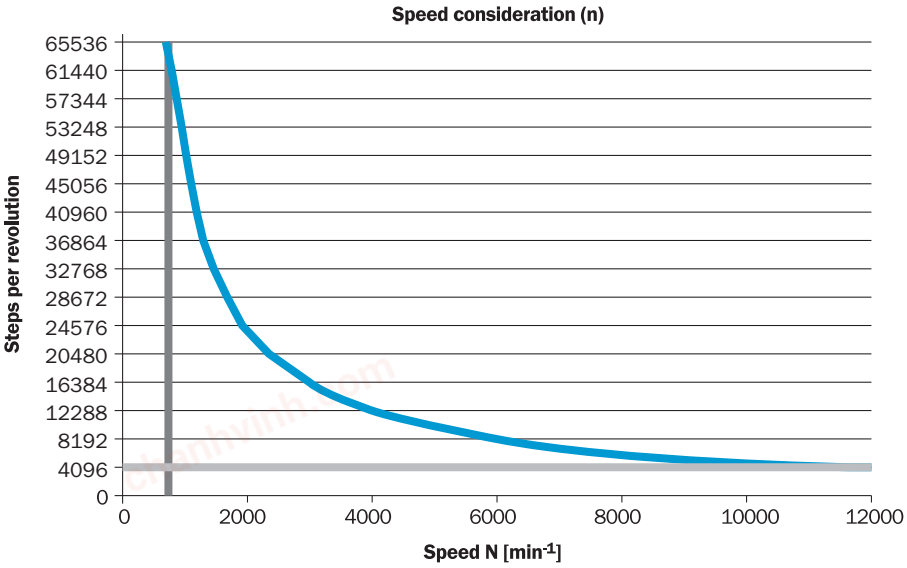

chanhvinh.com

Recommended accessories

Other models and accessories ➜ www.sick.com/DFS60

	Brief description	Type	Part no.
Flanges			
	Standard stator coupling	BEF-DS00XFX	2056812
Other mounting accessories			
	Clamping ring for metal hollow shaft[a], metal	BEF-KR-M	2064709
Plug connectors and cables			
	Head A: female connector, JST, 8-pin, straight Head B: Flying leads Cable: Incremental, SSI, PUR, halogen-free, shielded, 5 m	DOL-0J08-G05MAA3	2046876
	Head A: female connector, JST, 8-pin, straight Head B: Flying leads Cable: Incremental, SSI, PUR, halogen-free, shielded, 0.5 m	DOL-0J08-G0M5AA3	2046873
	Head A: female connector, JST, 8-pin, straight Head B: Flying leads Cable: Incremental, SSI, PUR, halogen-free, shielded, 10 m	DOL-0J08-G10MAA3	2046877
	Head A: female connector, JST, 8-pin, straight Head B: Flying leads Cable: SSI, Incremental, PUR, halogen-free, shielded, 1.5 m	DOL-0J08-G1M5AA6	2048590
	Head A: female connector, JST, 8-pin, straight Head B: Flying leads Cable: SSI, Incremental, PUR, halogen-free, shielded, 3 m	DOL-0J08-G3M0AA6	2048591
	Head A: female connector, JST, 8-pin, straight Head B: male connector, M23, 12-pin, straight Cable: Incremental, PUR, halogen-free, shielded, 1 m	STL-2312-G01MAA3	2061622
	Head A: female connector, JST, 8-pin, straight Head B: male connector, M23, 12-pin, straight Cable: Incremental, PUR, halogen-free, shielded, 2 m	STL-2312-G02MAA3	2061504
	Head A: female connector, JST, 8-pin, straight Head B: male connector, M23, 12-pin, straight Cable: Incremental, PUR, halogen-free, shielded, 0.35 m	STL-2312-GM35AA3	2061621
	Head A: male connector, M12, 8-pin, straight, A-coded Cable: Incremental, shielded	STE-1208-GA01	6044892
	Head A: male connector, M23, 12-pin, straight Cable: HIPERFACE®, SSI, Incremental, shielded	STE-2312-G01	2077273
		STE-2312-GX	6028548

chanhvinh.com

SICK AT A GLANCE

SICK is one of the leading manufacturers of intelligent sensors and sensor solutions for industrial applications. A unique range of products and services creates the perfect basis for controlling processes securely and efficiently, protecting individuals from accidents and preventing damage to the environment.

We have extensive experience in a wide range of industries and understand their processes and requirements. With intelligent sensors, we can deliver exactly what our customers need. In application centers in Europe, Asia and North America, system solutions are tested and optimized in accordance with customer specifications. All this makes us a reliable supplier and development partner.

Comprehensive services complete our offering: SICK LifeTime Services provide support throughout the machine life cycle and ensure safety and productivity.

For us, that is “Sensor Intelligence.”

WORLDWIDE PRESENCE:

Contacts and other locations –www.sick.com