chanhvinh.com

Product data sheet

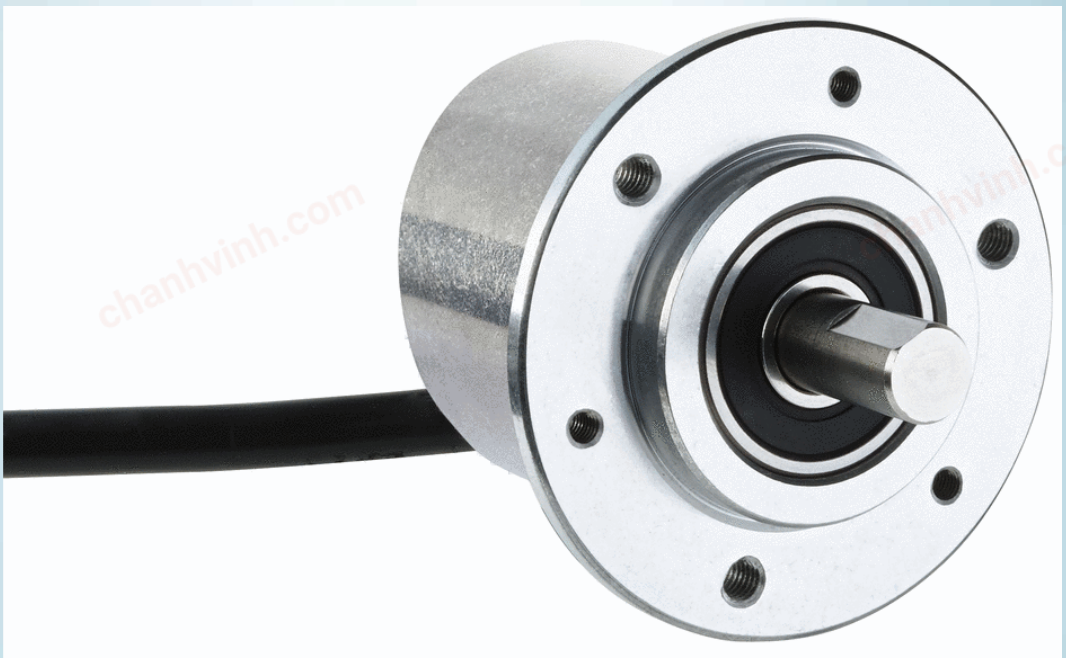

DBS50E-S5EK00100

DBS36/50

INCREMENTAL ENCODERS

SICK
Sensor Intelligence.

chanhvinh.com

DBS50E-S5EK00100 | DBS36/50

INCREMENTAL ENCODERS



Illustration may differ

Ordering information

Type	Part no.
DBS50E-S5EK00100	1060690

Other models and accessories → www.sick.com/DBS36_50

Detailed technical data

Performance

Pulses per revolution	100
Measuring step	90° electric/pulses per revolution
Measuring step deviation	± 18° / pulses per revolution
Error limits	± 54° / pulses per revolution
Duty cycle	≤ 0.5 ± 5 %

Interfaces

Communication interface	Incremental
Communication Interface detail	HTL / Push pull
Number of signal channels	6-channel
Initialization time	< 3 ms
Output frequency	≤ 300 kHz
Load current	≤ 30 mA
Power consumption	< 0.5 W (without load)

Electrical data

Connection type	Cable, 8-wire, universal, 1.5 m
Supply voltage	7 ... 30 V
Reference signal, number	1
Reference signal, position	90°, electric, logically gated with A and B
Reverse polarity protection	✓
Short-circuit protection of the outputs	✓ [1]
MTTFd: mean time to dangerous failure	600 years (EN ISO 13849-1) [2]

[1] The short-circuit rating is only given if Us and GND are connected correctly.

[2] This product is a standard product and does not constitute a safety component as defined in the Machinery Directive. Calculation based on nominal load of components, average ambient temperature 40 °C, frequency of use 8760 h/a. All electronic failures are considered hazardous. For more information, see document no. 8015532.

Mechanical data

Mechanical design	Solid shaft, face mount flange
Shaft diameter	8 mm

[1] Allow for self-heating of 3.3 K per 1,000 rpm when designing the operating temperature range.

[2] No permanent operation. Decreasing signal quality.

chanhvinh.com

Shaft length	15.5 mm
Weight	+ 180 g (with connecting cable)
Shaft material	Stainless steel
Flange material	Aluminum
Housing material	Aluminum
Material, cable	PVC
Start up torque	+ 0.9 Ncm (+20 °C)
Operating torque	0.6 Ncm (+20 °C)
Permissible shaft load	30 N (axial) 50 N (radial)
Operating speed	6,000 min^{-1} [1]
Maximum operating speed	8,000 min^{-1} [2]
Moment of inertia of the rotor	0.65 gcm^2
Bearing lifetime	2 x 10^9 revolutions
Angular acceleration	≤ 500,000 rad/s^2

[1] Allow for self-heating of 3.3 K per 1,000 rpm when designing the operating temperature range.
[2] No permanent operation. Decreasing signal quality.

Ambient data

EMC	According to EN 61000-6-2 and EN 61000-6-3 (class A)
Enclosure rating	IP65
Permissible relative humidity	90 % (Condensation not permitted)
Operating temperature range	–20 °C ... +85 °C, –35 °C ... +95 °C on request
Storage temperature range	–40 °C ... +100 °C, without package
Resistance to shocks	100 g, 6 ms (EN 60068-2-27)
Resistance to vibration	20 g, 10 Hz ... 2,000 Hz (EN 60068-2-6)

Classifications

eCl@ss 5.0	27270501
eCl@ss 5.1.4	27270501
eCl@ss 6.0	27270590
eCl@ss 6.2	27270590
eCl@ss 7.0	27270501
eCl@ss 8.0	27270501
eCl@ss 8.1	27270501
eCl@ss 9.0	27270501
eCl@ss 10.0	27270501
eCl@ss 11.0	27270501
eCl@ss 12.0	27270501
ETIM 5.0	EC001486
ETIM 6.0	EC001486
ETIM 7.0	EC001486
ETIM 8.0	EC001486

chanhvinh.com

DBS50E-S5EK00100 | DBS36/50

INCREMENTAL ENCODERS

UNSPSC 16.0901	41112113

Dimensional drawing (Dimensions in mm (inch))

Face mount flange

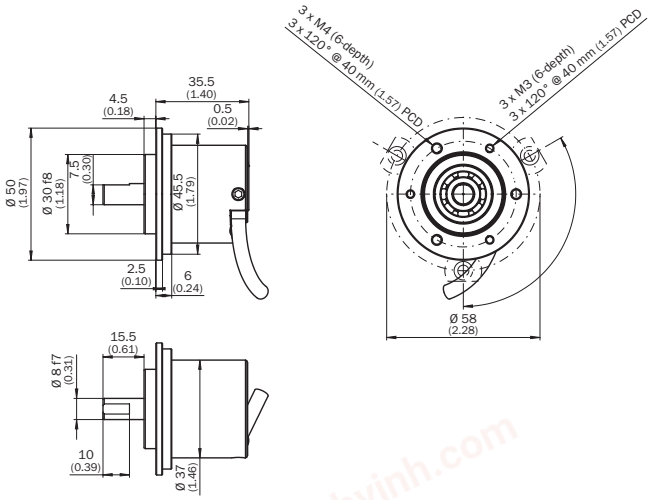

PIN assignment

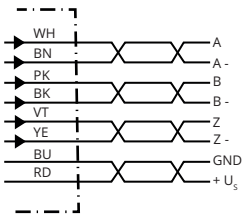

Wire colors (cable connection)	Male connector M12, 8-pin	Male connector M23, 12-pin	TTL/HTL 6-channel signal	Explanation
Brown	1	6	A-	Signal wire
White	2	5	A	Signal wire
Black	3	1	B-	Signal wire
Pink	4	8	B	Signal wire
Yellow	5	4	Z-	Signal wire
Purple	6	3	Z	Signal wire
Blue	7	10	GND	Ground connection
Red	8	12	$+U_s$	Supply voltage
-	-	9	Not assigned	Not assigned
-	-	2	Not assigned	Not assigned
-	-	11	Not assigned	Not assigned
-	-	7	Not assigned	Not assigned
Screen	Screen	Screen	Screen	Screen connected to encoder housing

chanhvinh.com

Diagrams

Signal outputs for electrical interfaces TTL and HTL

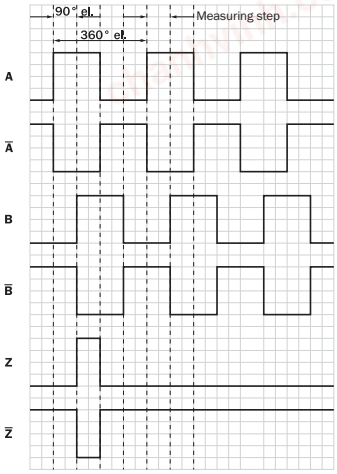

Cw with view on the encoder shaft in direction "A", compare dimensional drawing.

① Interfaces G, P, R only for channels A, B, Z.

Supply voltage	Output
4.5 V...5.5 V	TTL/RS422
7 V...30 V	TTL/RS422
7 V...30 V	HTL/Push Pull
7 V...27 V	HTL/push pull, 3 channel
4.5 V...5.5 V	Open Collector NPN, 3 channel
4.5 V...30 V	Open Collector NPN, 3 channel

Recommended accessories

Other models and accessories ➜ www.sick.com/DBS36_50

	Brief description	Type	Part no.
Plug connectors and cables			
	Head A: male connector, M12, 8-pin, straight, A-coded Cable: Incremental, shielded	STE-1208-GA01	6044892
	Head A: male connector, M23, 12-pin, straight Cable: HIPERFACE®, SSI, Incremental, shielded	STE-2312-G01	2077273
		STE-2312-GX	6028548

chanhvinh.com

SICK AT A GLANCE

SICK is one of the leading manufacturers of intelligent sensors and sensor solutions for industrial applications. A unique range of products and services creates the perfect basis for controlling processes securely and efficiently, protecting individuals from accidents and preventing damage to the environment.

We have extensive experience in a wide range of industries and understand their processes and requirements. With intelligent sensors, we can deliver exactly what our customers need. In application centers in Europe, Asia and North America, system solutions are tested and optimized in accordance with customer specifications. All this makes us a reliable supplier and development partner.

Comprehensive services complete our offering: SICK LifeTime Services provide support throughout the machine life cycle and ensure safety and productivity.

For us, that is “Sensor Intelligence.”

WORLDWIDE PRESENCE:

Contacts and other locations –www.sick.com

SICK
Sensor Intelligence.