chanhvinh.com

Product data sheet



BTF08-N1BM0299

HighLine

WIRE DRAW ENCODERS

SICK
Sensor Intelligence.

chanhvinh.com

BTF08-N1BM0299 | HighLine

WIRE DRAW ENCODERS



Illustration may differ

Ordering information

Type	Part no.
BTF08-N1BM0299	1060967

Included in delivery: MRA-F080-102D2 (1), AFM60A-S1NB018x12 (1)

Product is supplied fully assembled. See individual components for further technical data

Other models and accessories → www.sick.com/HighLine

Detailed technical data

Performance

BTF

Measurement range	0 m ... 2 m
Encoder	Absolute encoders
Resolution (wire draw + encoder)	0.0008 mm [1) 2)]
Repeatability	≤ 1 mm [3)]
Linearity	≤ ± 2 mm [3)]
Hysteresis	≤ 2 mm [3)]

[1)] The values shown have been rounded.

[2)] Example calculation based on the BTF08 with PROFINET: 200 mm (wire draw length per revolution - see Mechanical data): 262,144 (number of steps per revolution) = 0.001 mm (resolution of wire draw + encoder combination).

[3)] Value applies to wire draw mechanism.

Interfaces

BTF

Communication interface	PROFINET
Programmable/configurable	✓

Electrical data

BTF

Connection type	Male connector, 1x, M12, 4-pin, axial Female connector, 2x, M12, 4-pin, axial
Supply voltage	10 V DC ... 30 V DC
Power consumption	≤ 3 W (without load)
MTTFd: mean time to dangerous failure	80 years (EN ISO 13849-1) [1)]

[1)] This product is a standard product and does not constitute a safety component as defined in the Machinery Directive. Calculation based on nominal load of components, average ambient temperature 40 °C, frequency of use 8760 h/a. All electronic failures are considered hazardous. For more information, see document no. 8015532.

chanhvinh.com

Mechanical data

BTF

Weight	1.5 kg
Measuring wire material	Highly flexible stranded steel 1,4401 stainless steel V4A
Weight (measuring wire)	7.1 g/m
Housing material, wire draw mechanism	Aluminum (anodized), aluminum die cast (nickel-plated)
Spring return force	6 N ... 14 N [1]
Length of wire pulled out per revolution	200 mm
Life of wire draw mechanism	Typ. 1,000,000 cycles [2] [3]
Actual wire draw length	2.2 m
Wire acceleration	40 m/s²
Operating speed	8 m/s
Mounted encoder	AFM60 PROFINET, AFM60A-S1NB018X12, 1059040
Mounted mechanic	MRA-F080-102D2, 6028625

[1] These values were measred at an ambient temperature of 25 °C. There may be variations at other temperatures.
[2] Average values, which depend on the application.
[3] The service life depends on the type of load. This is influenced by environmental conditions, the installation location, the measuring range in use, the traversing speed, and acceleration.

Ambient data

BTF

EMC	According to EN 61000-6-2 and EN 61000-6-3 [1]
Enclosure rating	IP64
Operating temperature range	–30 °C ... +70 °C

[1] The EMC according to the standards quoted is achieved if screened cables are used.

Classifications

eCl@ss 5.0	27270590
eCl@ss 5.1.4	27270590
eCl@ss 6.0	27270590
eCl@ss 6.2	27270590
eCl@ss 7.0	27270590
eCl@ss 8.0	27270590
eCl@ss 8.1	27270590
eCl@ss 9.0	27270590
eCl@ss 10.0	27270613
eCl@ss 11.0	27270503
eCl@ss 12.0	27270503
ETIM 5.0	EC001486
ETIM 6.0	EC001486
ETIM 7.0	EC001486
ETIM 8.0	EC001486
UNSPSC 16.0901	41112113

chanhvinh.com

BTF08-N1BM0299 | HighLine

WIRE DRAW ENCODERS

Dimensional drawing (Dimensions in mm (inch))

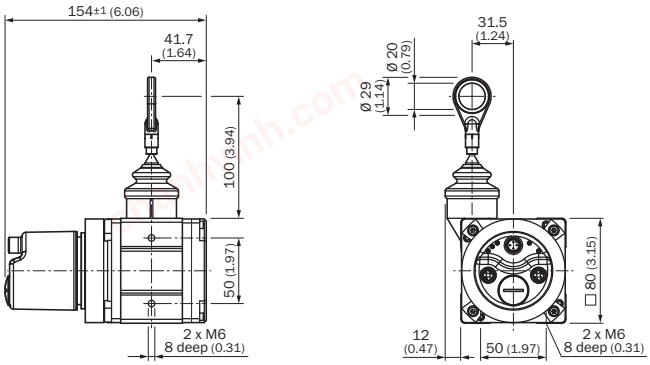

PIN assignment

Male connector

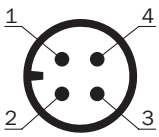

Supply voltage

PIN	Wire color	Signal
1	Brown	U_S 10 V ... 30 V
2	White	Not assigned
3	Blue	GND
4	Black	Not assigned

Female connector

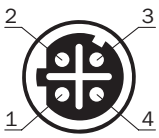

Port 1, Port 2

PIN	Wire color	Signal
1	Yellow	T x D+
2	White	R x D+
3	Orange	T x D-
4	Blue	R x D-

chanhvinh.com

Connection diagram

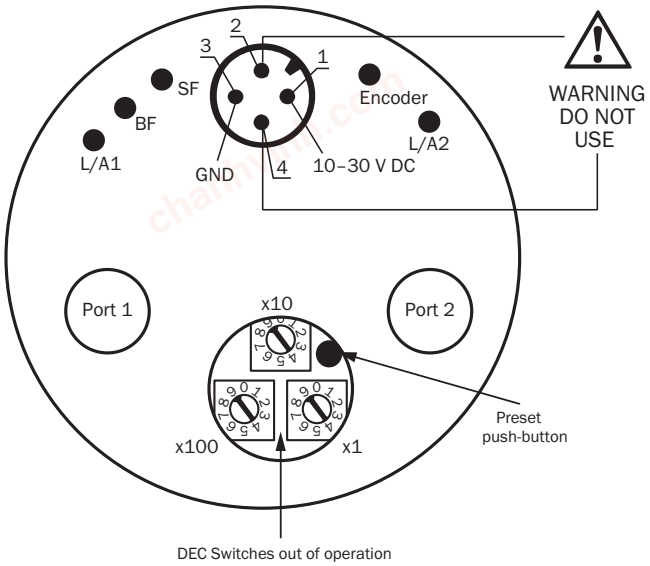

Recommended accessories

Other models and accessories ➜ www.sick.com/HighLine

	Brief description	Type	Part no.
Wire draw mechanism			
	HighLine wire draw mechanism for servo flange with 6 mm shaft, measuring range 0 m ... 2 m	MRA-F080-102D2	6028625
Flanges			
	Flange adapter for HighLine wire draw mechanisms, adaption of face mount flange with centering hub 20 mm to 50 mm servo flange, Aluminum, including 3 countersunk screws M3 x 10	BEF-FA-020-050WDE	2073776
Other mounting accessories			
	Joint ball for later insertion in wire end ring with 20 mm diameter. The use of this joint ball enables movement in multiple levels of freedom.	Joint protection for wire rope BTF/PRF/MRA	5318683
	Compressed air attachment for MRA-F080... and MRA-F130... HighLine wire draw mechanism	MRA-F-P	6073769
	Additional brush attachment for wire draw mechanism MRA-F080 (2 m and 3 m from HighLine series)	MRA-F080-B	6045341
	Wire draw deflection pulley for wire draw mechanism MRA-F080 (2m and 3m from HighLine series)	MRA-F080-R	6028632

chanhvinh.com

BTF08-N1BM0299 | HighLine

WIRE DRAW ENCODERS

	Brief description	Type	Part no.
Plug connectors and cables			
	Head A: male connector, M12, 4-pin, straight, D-coded Head B: Flying leads Cable: PROFINET, PVC, shielded, 2 m	STL-1204-G02MZ90	6048247
	Head A: male connector, M12, 4-pin, straight, D-coded Head B: Flying leads Cable: PROFINET, PVC, shielded, 5 m	STL-1204-G05MZ90	6048248
	Head A: male connector, M12, 4-pin, straight, D-coded Head B: Flying leads Cable: PROFINET, PVC, shielded, 10 m	STL-1204-G10MZ90	6048249
	Head A: male connector, M12, 4-pin, angled, D-coded Head B: Flying leads Cable: PROFINET, PVC, shielded, 5 m	STL-1204-W05MZ90	6048257
	Head A: male connector, M12, 4-pin, angled, D-coded Head B: Flying leads Cable: PROFINET, PVC, shielded, 25 m	STL-1204-W25MZ90	6048259
	Head A: female connector, M12, 4-pin, straight, A-coded Head B: Flying leads Cable: Sensor/actuator cable, PUR, halogen-free, unshielded, 2 m	YF2A14-020UB3XLEAX	2095607
	Head A: female connector, M12, 4-pin, straight, A-coded Head B: Flying leads Cable: Sensor/actuator cable, PUR, halogen-free, unshielded, 5 m	YF2A14-050UB3XLEAX	2095608
	Head A: female connector, M12, 4-pin, straight, A-coded Head B: Flying leads Cable: Sensor/actuator cable, PUR, halogen-free, unshielded, 10 m	YF2A14-100UB3XLEAX	2095609
	Head A: female connector, M12, 4-pin, straight, A-coded Head B: Flying leads Cable: Sensor/actuator cable, PUR, halogen-free, unshielded, 25 m	YF2A14-250UB3XLEAX	2095615
	Head A: female connector, M12, 4-pin, angled, A-coded Head B: Flying leads Cable: Sensor/actuator cable, PUR, halogen-free, unshielded, 2 m	YG2A14-020UB3XLEAX	2095766
	Head A: female connector, M12, 4-pin, angled, A-coded Head B: Flying leads Cable: Sensor/actuator cable, PUR, halogen-free, unshielded, 5 m	YG2A14-050UB3XLEAX	2095767
	Head A: female connector, M12, 4-pin, angled, A-coded Head B: Flying leads Cable: Sensor/actuator cable, PUR, halogen-free, unshielded, 10 m	YG2A14-100UB3XLEAX	2095768
	Head A: female connector, M12, 4-pin, angled, A-coded Head B: Flying leads Cable: Sensor/actuator cable, PUR, halogen-free, unshielded, 25 m	YG2A14-250UB3XLEAX	2095771
	Head A: male connector, M12, 4-pin, angled, D-coded Head B: male connector, M12, 4-pin, angled, D-coded Cable: PROFINET, PUR, halogen-free, shielded, 2 m	SSL-1204-W02MZ	6050635
	Head A: male connector, M12, 4-pin, angled, D-coded Head B: male connector, M12, 4-pin, angled, D-coded Cable: PROFINET, PUR, halogen-free, shielded, 5 m	SSL-1204-W05MZ	6050636
	Head A: male connector, M12, 4-pin, angled, D-coded Head B: male connector, M12, 4-pin, angled, D-coded Cable: PROFINET, EtherCAT®, PUR, halogen-free, shielded, 10 m	SSL-1204-W10MZ	6050637
	Head A: male connector, RJ45, 4-pin, straight Head B: male connector, M12, 4-pin, angled, D-coded Cable: PROFINET, EtherCAT®, PVC, shielded, 2 m	SSL-2J04-F02MZ	6048253
	Head A: male connector, RJ45, 4-pin, straight Head B: male connector, M12, 4-pin, angled, D-coded Cable: PROFINET, EtherCAT®, PVC, shielded, 5 m	SSL-2J04-F05MZ	6048254

chanhvinh.com

	Brief description	Type	Part no.
	Head A: male connector, RJ45, 4-pin, straight Head B: male connector, M12, 4-pin, angled, D-coded Cable: PROFINET, EtherCAT®, PVC, shielded, 10 m	SSL-2J04-F10MZ	6048255
	Head A: male connector, RJ45, 4-pin, straight Head B: male connector, M12, 4-pin, angled, D-coded Cable: PROFINET, EtherCAT®, PVC, shielded, 30 m	SSL-2J04-F30MZ	6059450
	Head A: female connector, M12, 4-pin, angled Cable: unshielded	DOS-1204-W	6007303
	Head A: male connector, M12, 4-pin, angled, D-coded Cable: PROFINET, shielded	STE-1204-WZ	6048262
	Head A: female connector, M12, 4-pin, D-coded Head B: female connector, RJ45, 8-pin Cable: Ethernet, shielded Cabinet through	Feedthrough female connector Ethernet RJ45	6048180

chanhvinh.com

SICK AT A GLANCE

SICK is one of the leading manufacturers of intelligent sensors and sensor solutions for industrial applications. A unique range of products and services creates the perfect basis for controlling processes securely and efficiently, protecting individuals from accidents and preventing damage to the environment.

We have extensive experience in a wide range of industries and understand their processes and requirements. With intelligent sensors, we can deliver exactly what our customers need. In application centers in Europe, Asia and North America, system solutions are tested and optimized in accordance with customer specifications. All this makes us a reliable supplier and development partner.

Comprehensive services complete our offering: SICK LifeTime Services provide support throughout the machine life cycle and ensure safety and productivity.

For us, that is "Sensor Intelligence."

WORLDWIDE PRESENCE:

Contacts and other locations –www.sick.com

SICK
Sensor Intelligence.