chanhvinh.com

Product data sheet

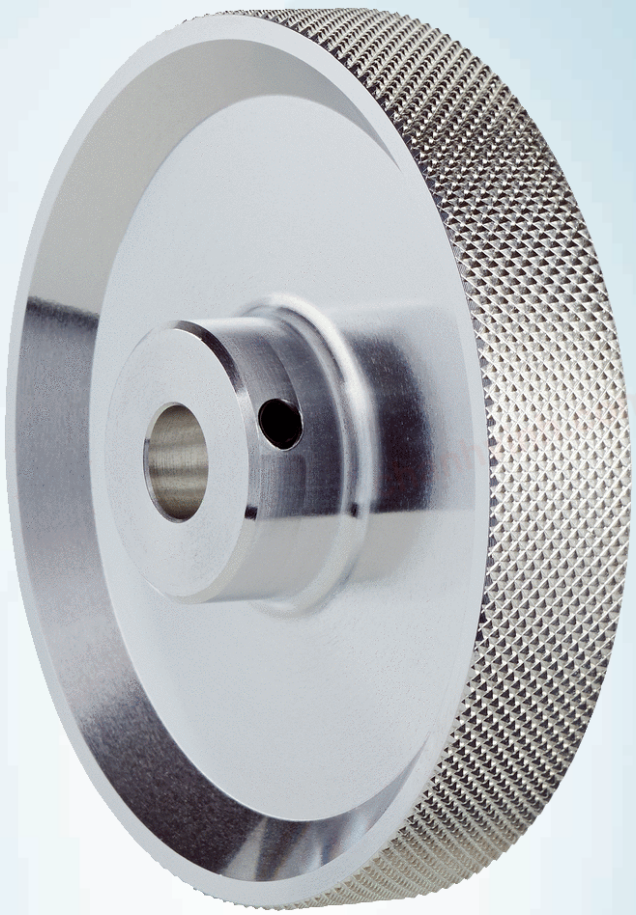

BEF-MR10200AK

SICK
Sensor Intelligence.

chanhvinh.com

BEF-MR10200AK

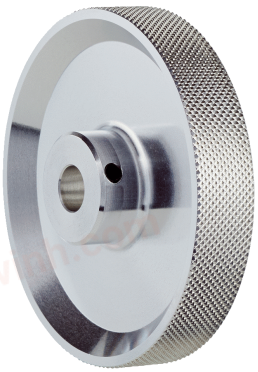

Ordering information

Type	Part no.
BEF-MR10200AK	4084737

Other models and accessories → www.sick.com/

Detailed technical data

Technical specifications

Accessory group	Other mounting accessories
Accessory family	Measuring wheels and measuring wheel systems
Description	Aluminum measuring wheel with cross-knurled surface for 10 mm solid shaft, circumference 200 mm
Weight	60 g
Circumference	200 mm
Bore diameter	10 mm
Surface	Cross knurled aluminium
Ambient operating temperature	–30 °C ... +80 °C
Measuring surface	Cardboard Wood Textiles Vulcanized Rubber Soft plastic
Moment of inertia	310 gcm²

Classifications

eCl@ss 5.0	21160104
eCl@ss 5.1.4	21160104
eCl@ss 6.0	21160104
eCl@ss 6.2	21160104
eCl@ss 7.0	21160104
eCl@ss 8.0	21160104
eCl@ss 8.1	21160104
eCl@ss 9.0	21160104
eCl@ss 10.0	21160104
eCl@ss 11.0	21160104
eCl@ss 12.0	21160104
ETIM 5.0	EC002179
ETIM 6.0	EC002179

chanhvinh.com

ETIM 7.0	EC002179
ETIM 8.0	EC002179
UNSPSC 16.0901	25191839

Dimensional drawing (Dimensions in mm (inch))

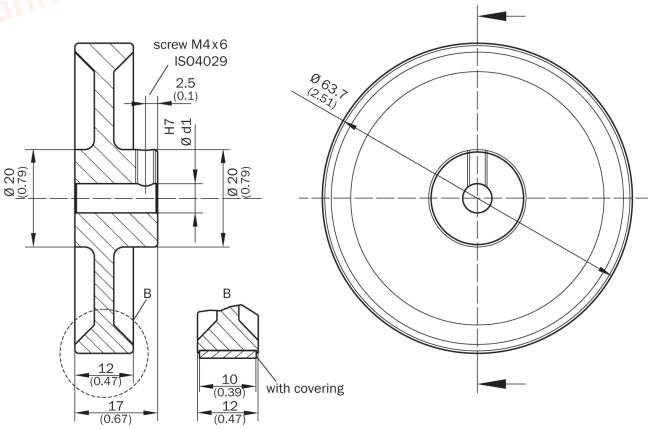

chanhvinh.com

SICK AT A GLANCE

SICK is one of the leading manufacturers of intelligent sensors and sensor solutions for industrial applications. A unique range of products and services creates the perfect basis for controlling processes securely and efficiently, protecting individuals from accidents and preventing damage to the environment.

We have extensive experience in a wide range of industries and understand their processes and requirements. With intelligent sensors, we can deliver exactly what our customers need. In application centers in Europe, Asia and North America, system solutions are tested and optimized in accordance with customer specifications. All this makes us a reliable supplier and development partner.

Comprehensive services complete our offering: SICK LifeTime Services provide support throughout the machine life cycle and ensure safety and productivity.

For us, that is "Sensor Intelligence."

WORLDWIDE PRESENCE:

Contacts and other locations –www.sick.com

SICK
Sensor Intelligence.