chanhvinh.com

Product data sheet

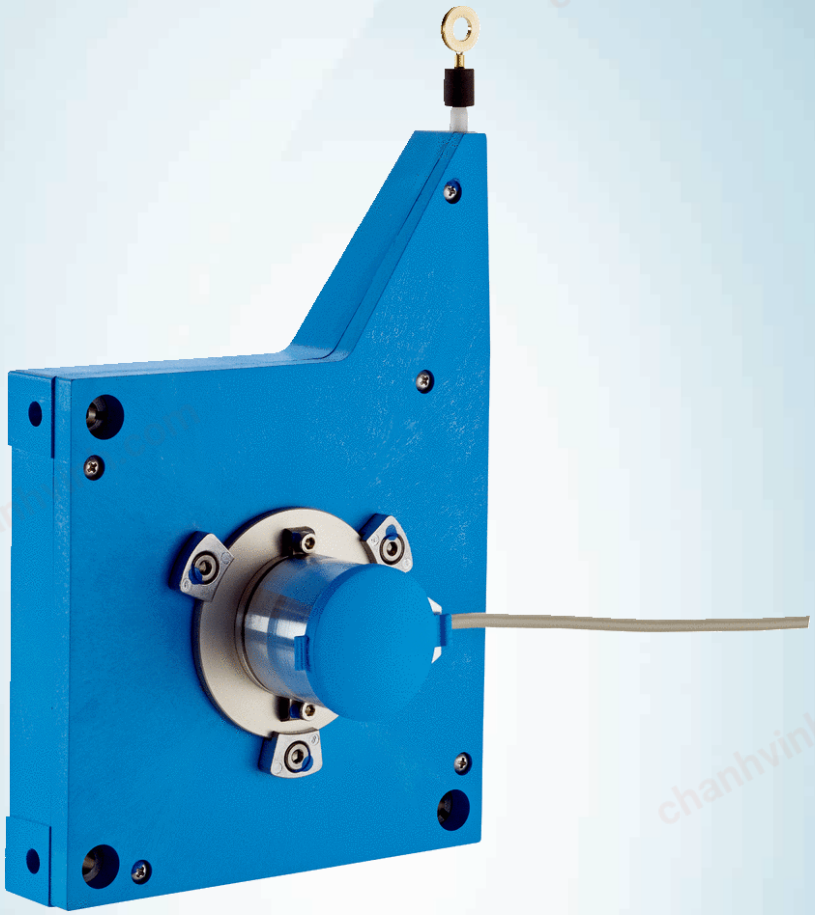

BCG13-K1KM05PP

EcoLine

WIRE DRAW ENCODERS

SICK
Sensor Intelligence.

chanhvinh.com

BCG13-K1KM05PP | EcoLine

WIRE DRAW ENCODERS

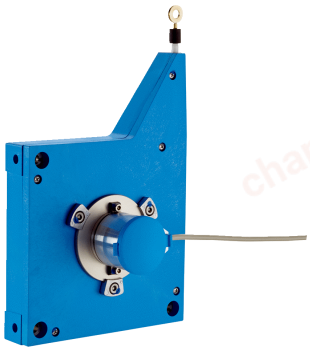

Illustration may differ

Ordering information

Type	Part no.
BCG13-K1KM05PP	6039749

Included in delivery: MRA-G130-105D3 (1), ACM36-K1K0-K01 (1)

Product is supplied fully assembled. See individual components for further technical data

Other models and accessories ➜ www.sick.com/EcoLine

Detailed technical data

Performance

BCG

Measurement range	0 m ... 5 m
Encoder	Absolute encoders
Resolution (wire draw + encoder)	0.1 mm [1) 2)]
Repeatability	≤ 0.2 mm [3)]
Linearity	≤ ± 2 mm [3)]
Hysteresis	≤ 0.4 mm [3)]

[1)] The values shown have been rounded.

[2)] Example calculation based on the BCG08 with PROFINET: 230 mm (wire draw length per revolution - see Mechanical data): 262,144 (number of steps per revolution) = 0.001 mm (resolution of wire draw + encoder combination).

[3)] Value applies to wire draw mechanism.

Interfaces

BCG

Communication interface	Analog / Current / 4...20 mA

Electrical data

BCG

Connection type	Cable, radial, 1.5 m
Supply voltage	19 V DC ... 33 V DC
Operating current	≤ 80 mA
MTTFd: mean time to dangerous failure	850 years (EN ISO 13849-1) [1)]

[1)] This product is a standard product and does not constitute a safety component as defined in the Machinery Directive. Calculation based on nominal load of components, average ambient temperature 40 °C, frequency of use 8760 h/a. All electronic failures are considered hazardous. For more information, see document no. 8015532.

chanhvinh.com

Mechanical data

BCG

Weight	1.2 kg
Measuring wire material	Highly flexible stranded steel 1,4401 stainless steel V4A
Weight (measuring wire)	1.2 g/m
Housing material, wire draw mechanism	Plastic, Noryl
Spring return force	4.5 N ... 7 N [1]
Length of wire pulled out per revolution	385 mm
Life of wire draw mechanism	Typ. 1,000,000 cycles [2] [3]
Actual wire draw length	5.2 m
Wire acceleration	4 m/s²
Operating speed	3 m/s
Mounted encoder	ACM36, ACM36-K1K0-K01, 6039751
Mounted mechanic	MRA-G130-105D3, 5322779

[1] These values were measred at an ambient temperature of 25 °C. There may be variations at other temperatures.
[2] Average values, which depend on the application.
[3] The service life depends on the type of load. This is influenced by environmental conditions, the installation location, the measuring range in use, the traversing speed, and acceleration.

Ambient data

BCG

EMC	According to EN 61000-6-2 and EN 61000-6-4
Enclosure rating	IP50
Operating temperature range	–30 °C ... +70 °C

Classifications

eCl@ss 5.0	27270590
eCl@ss 5.1.4	27270590
eCl@ss 6.0	27270590
eCl@ss 6.2	27270590
eCl@ss 7.0	27270590
eCl@ss 8.0	27270590
eCl@ss 8.1	27270590
eCl@ss 9.0	27270590
eCl@ss 10.0	27270613
eCl@ss 11.0	27270503
eCl@ss 12.0	27270503
ETIM 5.0	EC001486
ETIM 6.0	EC001486
ETIM 7.0	EC001486
ETIM 8.0	EC001486
UNSPSC 16.0901	41112113

chanhvinh.com

BCG13-K1KM05PP | EcoLine

WIRE DRAW ENCODERS

Dimensional drawing (Dimensions in mm (inch))

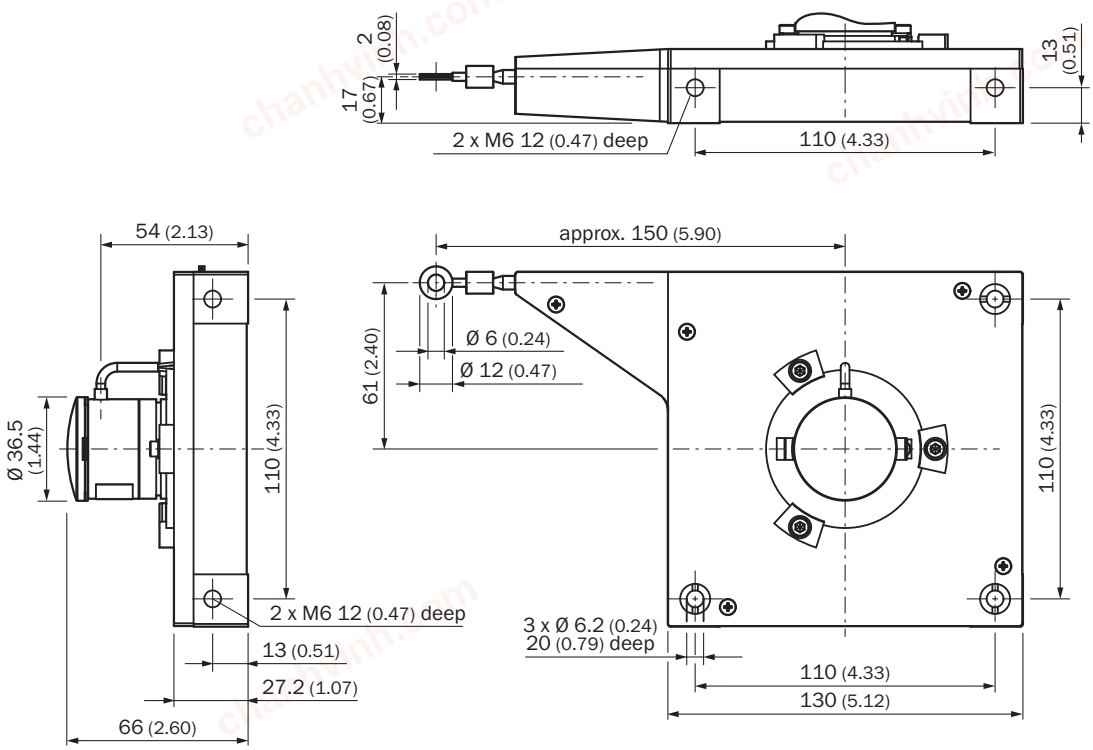

PIN assignment

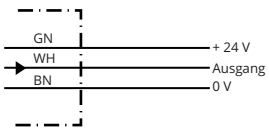

Diagrams

Multiturn, current output

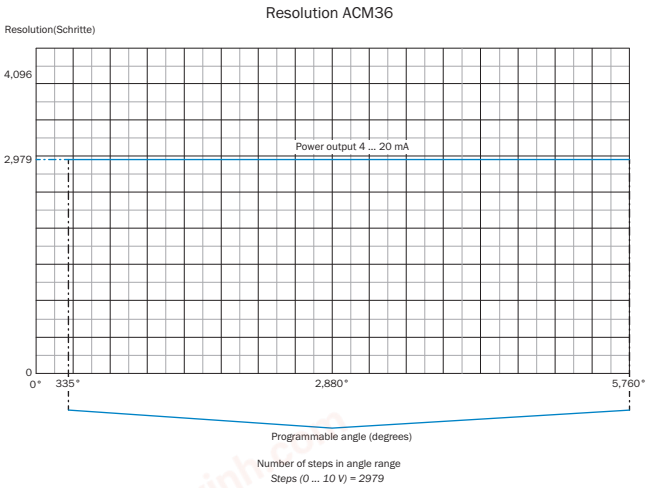

chanhvinh.com

Configured range (α) must be at least 10 °

Recommended accessories

Other models and accessories ➜ www.sick.com/EcoLine

	Brief description	Type	Part no.
Wire draw mechanism			
	EcoLine wire draw mechanism for servo flange with 6 mm shaft, measuring range 0 m ... 5 m	MRA-G130-105D3	5322779
Flanges			
	Flange adapter for EcoLine wire draw mechanisms, adaption of face mount flange with centering hub 20 mm to 50 mm servo flange, Aluminum, including 3 countersunk screws M3 x 10	BEF-FA-020-050-007	2073774

chanhvinh.com

SICK AT A GLANCE

SICK is one of the leading manufacturers of intelligent sensors and sensor solutions for industrial applications. A unique range of products and services creates the perfect basis for controlling processes securely and efficiently, protecting individuals from accidents and preventing damage to the environment.

We have extensive experience in a wide range of industries and understand their processes and requirements. With intelligent sensors, we can deliver exactly what our customers need. In application centers in Europe, Asia and North America, system solutions are tested and optimized in accordance with customer specifications. All this makes us a reliable supplier and development partner.

Comprehensive services complete our offering: SICK LifeTime Services provide support throughout the machine life cycle and ensure safety and productivity.

For us, that is "Sensor Intelligence."

WORLDWIDE PRESENCE:

Contacts and other locations –www.sick.com

SICK
Sensor Intelligence.