chanhvinh.com

Product data sheet

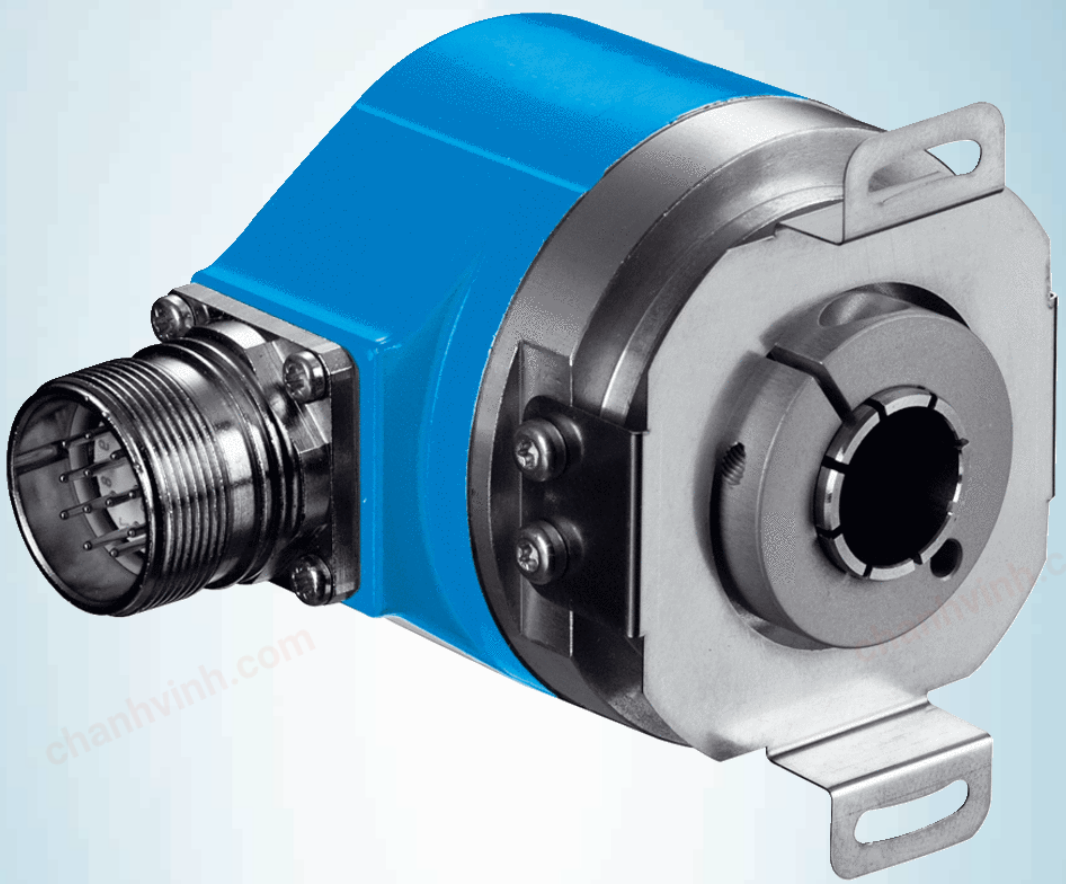

ARS60-AAA32768

ARS60

ABSOLUTE ENCODERS

SICK
Sensor Intelligence.

chanhvinh.com

ARS60-AAA32768 | ARS60

ABSOLUTE ENCODERS

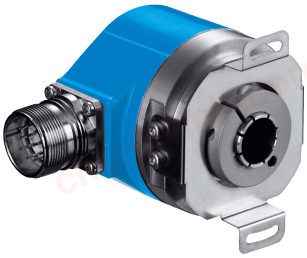

Illustration may differ

Ordering information

Type	Part no.
ARS60-AAA32768	1031512

Other models and accessories → www.sick.com/ARS60

Detailed technical data

Performance

Measuring step	360° /number of steps
Measuring step deviation	0.005°, 0.016°
Error limits G	0.035° (binary number of steps) [1] 0.046° (non-binary number of steps) [1]
Repeatability standard deviation σ_r	0.005° [2]

[1] In accordance with DIN ISO 1319-1, position of the upper and lower error limit depends on the installation situation, specified value refers to a symmetrical position, i.e. deviation in upper and lower direction is the same.
[2] In accordance with DIN ISO 55350-13; 68.3% of the measured values are inside the specified area.

Interfaces

Communication interface	SSI
Initialization time	80 ms [1]
Code type	Gray
Code sequence parameter adjustable	CW (clockwise) increasing when viewing the clockwise rotating shaft
Measured value backlash	0.005°
Response threshold	0.003°

[1] Valid positional data can be read once this time has elapsed.

Electrical data

Connection type	Male connector, M23, 12-pin, radial
Supply voltage	10 ... 32 V
MTTFd: mean time to dangerous failure	300 years (EN ISO 13849-1) [1]
Switching level of control inputs	Logic H = 0.7 x U_S, Logic L = 0 V ... 0.3 x US
Actuation of set button	≥ 100 ms [2]

[1] This product is a standard product and does not constitute a safety component as defined in the Machinery Directive. Calculation based on nominal load of components, average ambient temperature 40 °C, frequency of use 8760 h/a. All electronic failures are considered hazardous. For more information, see document no. 8015532.
[2] Only with shaft stationary (note initialisation time).

chanhvinh.com

Mechanical data

Mechanical design	Blind hollow shaft
Shaft diameter	15 mm [1]
Weight	Approx. 0.3 kg [2]
Housing material	Aluminum die cast
Start up torque	Typ. 0.6 Ncm
Operating torque	Typ. 0.4 Ncm
Permissible movement static	± 0.3 mm (radial) ± 0.5 mm (axial)
Permissible movement dynamic	± 0.1 mm (radial) ± 0.2 mm (axial)
Operating speed	≤ 3,000 min^{-1}
Moment of inertia of the rotor	See figure
Bearing lifetime	3.6 x 10^9 revolutions
Angular acceleration	≤ 500,000 rad/s^2

[1] Order collets for 6, 8, 10, and 12 mm and 1/4", 3/8", and 1/2" separately as accessories.
[2] Based on devices with male connector.

Ambient data

EMC	According to EN 61000-6-2 and EN 61000-6-3 [1]
Enclosure rating	IP65, male connector (IEC 60529) [2] IP66, cable (IEC 60529)
Permissible relative humidity	90 % (Condensation not permitted)
Operating temperature range	–20 °C ... +85 °C
Storage temperature range	–40 °C ... +100 °C, without package
Resistance to shocks	50 g, 11 ms (EN 60068-2-27)
Resistance to vibration	20 g, 10 Hz ... 2,000 Hz (EN 60068-2-6)

[1] EMC according to the standards quoted is achieved if shielded cables are used.
[2] With mating connector fitted.

Classifications

eCl@ss 5.0	27270502
eCl@ss 5.1.4	27270502
eCl@ss 6.0	27270590
eCl@ss 6.2	27270590
eCl@ss 7.0	27270502
eCl@ss 8.0	27270502
eCl@ss 8.1	27270502
eCl@ss 9.0	27270502
eCl@ss 10.0	27270502
eCl@ss 11.0	27270502
eCl@ss 12.0	27270502
ETIM 5.0	EC001486
ETIM 6.0	EC001486

chanhvinh.com

ETIM 7.0	EC001486
ETIM 8.0	EC001486
UNSPSC 16.0901	41112113

Dimensional drawing (Dimensions in mm (inch))

Blind hollow shaft, axial male connector M12 and M23

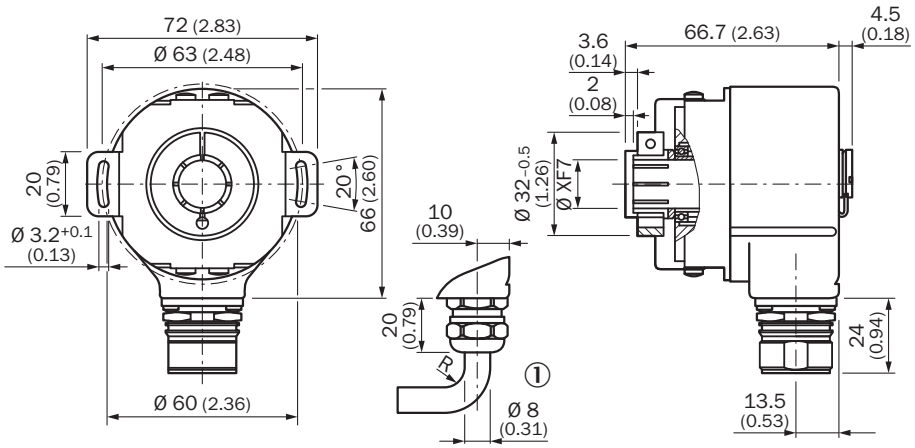

General tolerances according to DIN ISO 2768-mk

① R = min. bending radius 40 mm

PIN assignment

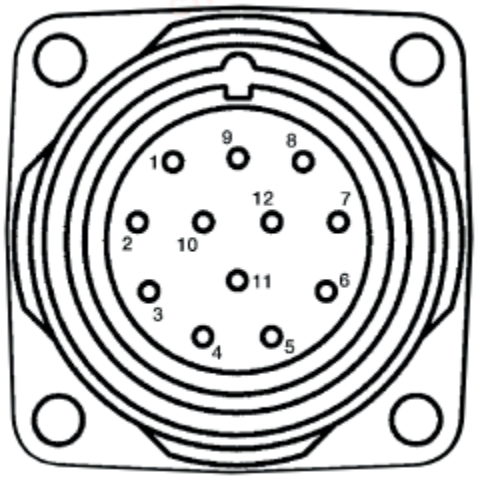

PIN 12-pin	Wire colors (cable connection) 11-wire	Signal
1	Blue	GND
2	White	Data +
3	Yellow	Clock +
4	N.c.	N.c.

chanhvinh.com

PIN 12-pin	Wire colors (cable connection) 11-wire	Signal
5	Pink	CW/CCW (V/R)
6	N.c.	N.c.
7	N.c.	N.c.
8	Red	U_S
9	Orange	SET
10	Brown	Data -
11	Violet	Clock -
12	N.c.	N.c.

Diagrams

Moment of inertia of the rotor

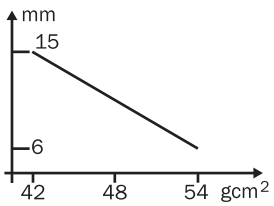

Blind hollow shaft

Recommended accessories

Other models and accessories ➜ www.sick.com/ARS60

	Brief description	Type	Part no.
Plug connectors and cables			
	Head A: cable Head B: Flying leads Cable: SSI, Incremental, HIPERFACE®, PUR, halogen-free, shielded	LTG-2308-MWENC	6027529
	Head A: cable Head B: Flying leads Cable: SSI, Incremental, PUR, shielded	LTG-2411-MW	6027530
	Head A: cable Head B: Flying leads Cable: SSI, Incremental, PUR, halogen-free, shielded	LTG-2512-MW	6027531
	Head A: cable Head B: Flying leads Cable: SSI, TTL, HTL, Incremental, PUR, halogen-free, shielded	LTG-2612-MW	6028516
	Head A: female connector, M23, 12-pin, straight Head B: Flying leads Cable: SSI, PUR, halogen-free, shielded, 3 m	DOL-2312-G03MMA2	2029207
	Head A: female connector, M23, 12-pin, straight Head B: Flying leads Cable: SSI, PUR, halogen-free, shielded, 5 m	DOL-2312-G05MMA2	2029208

chanhvinh.com

ARS60-AAA32768 | ARS60

ABSOLUTE ENCODERS

	Brief description	Type	Part no.
	Head A: female connector, M23, 12-pin, straight Head B: Flying leads Cable: SSI, PUR, halogen-free, shielded, 10 m	DOL-2312-G10MMA2	2029209
	Head A: female connector, M23, 12-pin, straight Head B: Flying leads Cable: SSI, PUR, halogen-free, shielded, 1.5 m	DOL-2312-G1M5MA2	2029206
	Head A: female connector, M23, 12-pin, straight Head B: Flying leads Cable: SSI, PUR, halogen-free, shielded, 20 m	DOL-2312-G20MMA2	2029210
	Head A: female connector, M23, 12-pin, straight Head B: Flying leads Cable: SSI, PUR, halogen-free, shielded, 30 m	DOL-2312-G30MMA2	2029211
	Head A: female connector, M23, 9-pin, straight Cable: HIPERFACE®, SSI, Incremental, shielded	DOS-2309-G	6028533
	Head A: female connector, M23, 12-pin, straight Cable: HIPERFACE®, SSI, Incremental, shielded	DOS-2312-G	6027538
	Head A: female connector, M23, 12-pin, angled Cable: HIPERFACE®, SSI, Incremental, shielded	DOS-2312-W01	2072580
	Head A: male connector, M23, 12-pin, straight Cable: HIPERFACE®, SSI, Incremental, RS-422, shielded	STE-2312-G	6027537
Shaft adaptation			
	Collet for blind hollow shaft, shaft diameter 6 mm, outer diameter 15 mm	SPZ-006-AD-A	2029174
	Collet for blind hollow shaft, shaft diameter 8 mm, outer diameter 15 mm	SPZ-008-AD-A	2029176
	Collet for blind hollow shaft, shaft diameter 10 mm, outer diameter 15 mm	SPZ-010-AD-A	2029178
	Collet for blind hollow shaft, shaft diameter 12 mm, outer diameter 15 mm	SPZ-012-AD-A	2029179
	Collet for blind hollow shaft, shaft diameter 1/2" (12.7 mm), outer diameter 15 mm	SPZ-1E2-AD-A	2029180
	Collet for blind hollow shaft, shaft diameter 1/4" (6.35 mm), outer diameter 15 mm	SPZ-1E4-AD-A	2029175
	Collet for blind hollow shaft, shaft diameter 3/8" (9.525 mm), outer diameter 15 mm	SPZ-3E8-AD-A	2029177

chanhvinh.com

SICK AT A GLANCE

SICK is one of the leading manufacturers of intelligent sensors and sensor solutions for industrial applications. A unique range of products and services creates the perfect basis for controlling processes securely and efficiently, protecting individuals from accidents and preventing damage to the environment.

We have extensive experience in a wide range of industries and understand their processes and requirements. With intelligent sensors, we can deliver exactly what our customers need. In application centers in Europe, Asia and North America, system solutions are tested and optimized in accordance with customer specifications. All this makes us a reliable supplier and development partner.

Comprehensive services complete our offering: SICK LifeTime Services provide support throughout the machine life cycle and ensure safety and productivity.

For us, that is “Sensor Intelligence.”

WORLDWIDE PRESENCE:

Contacts and other locations –www.sick.com

SICK
Sensor Intelligence.