chanhvinh.com

Product data sheet

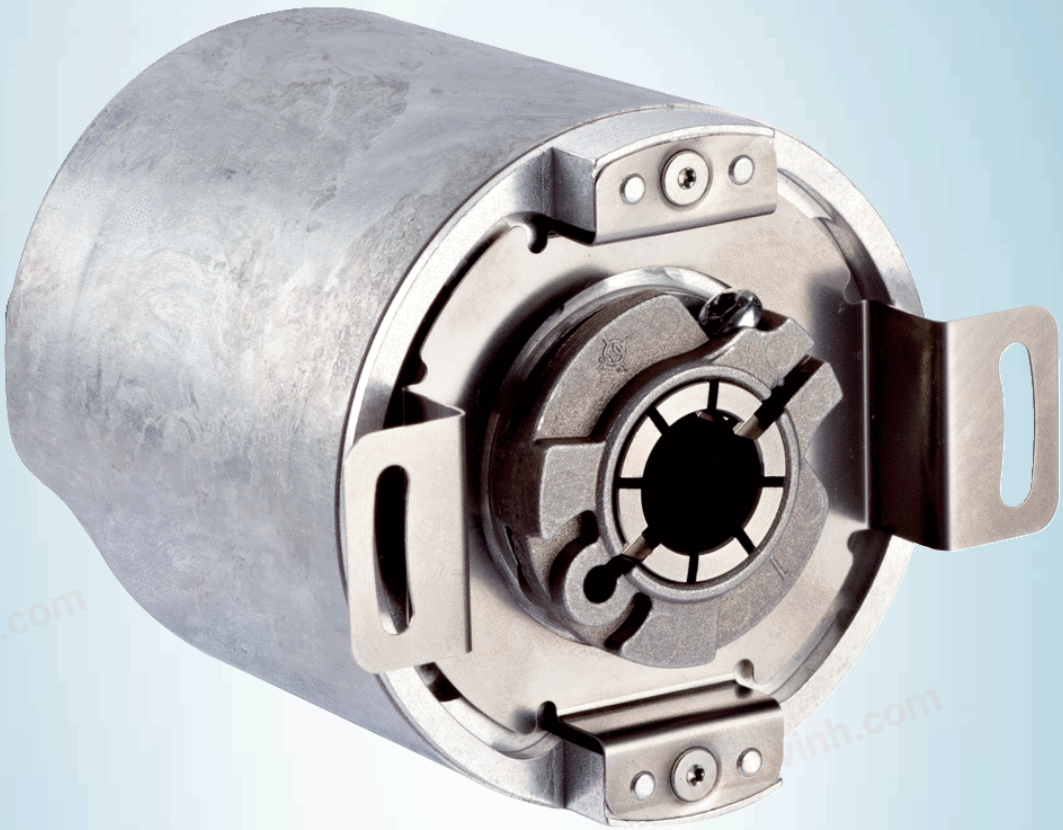

AFM60A-BBIB018x12

AFS/AFM60 Ethernet

ABSOLUTE ENCODERS

SICK
Sensor Intelligence.

chanhvinh.com

AFM60A-BBIB018x12 | AFS/AFM60 Ethernet

ABSOLUTE ENCODERS

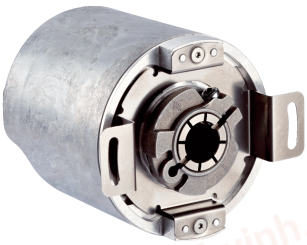

Illustration may differ

Ordering information

Type	Part no.
AFM60A-BBIB018x12	1077495

Other models and accessories → www.sick.com/AFS_AFM60_Ethernet

Detailed technical data

Performance

Number of steps per revolution (max. resolution)	262,144 (18 bit)
Number of revolutions	4,096 (12 bit)
Max. resolution (number of steps per revolution x number of revolutions)	18 bit x 12 bit (262,144 x 4,096)
Error limits G	0.03° [1]
Repeatability standard deviation σ_r	0.002° [2]

[1] In accordance with DIN ISO 1319-1, position of the upper and lower error limit depends on the installation situation, specified value refers to a symmetrical position, i.e. deviation in upper and lower direction is the same.

[2] In accordance with DIN ISO 55350-13; 68.3% of the measured values are inside the specified area.

Interfaces

Communication interface	EtherNet/IP™
Encoder profile	0 x 22
Data transmission rate (baud rate)	10 Mbit/s 100 Mbit/s
Transmission medium	CAT-5e cable
Initialization time	Approx. 10 s
RPI (requested packet interval)	5 ms ... 750 ms
Parameterising data	Number of steps per revolution Number of revolutions PRESET Counting direction Sampling rate for speed calculation Unit for output of speed, acceleration and temperature value Output of scalable limit values such as: position ranges, speed, acceleration, start-up of the CW/CCW directions of rotation, change of direction of rotation, operating hours and hours of shaft movement (motion) Round axis functionality Heartbeat
Available diagnostics data	Minimum and maximum temperature Maximumspeed Power-on counter Operatinghours counter power-on/motion Counter of direction changes/number of movements cw/number of movements ccw Number of changes of direction Minimum andmaximum operating voltage

chanhvinh.com

	Signal monitoring for singleturn and multiturn
DLR (Device Level Ring)	✓

Electrical data

Connection type	Male connector, 1x, M12, 4-pin, axial [1] Female connector, 2x, M12, 4-pin, axial [2]
Supply voltage	10 ... 30 V
Power consumption	≤ 3 W (without load)
Reverse polarity protection	✓
MTTFd: mean time to dangerous failure	80 years (EN ISO 13849-1) [3]

[1] A-coded.

[2] D-coded.

[3] This product is a standard product and does not constitute a safety component as defined in the Machinery Directive. Calculation based on nominal load of components, average ambient temperature 40 °C, frequency of use 8760 h/a. All electronic failures are considered hazardous. For more information, see document no. 8015532.

Mechanical data

Mechanical design	Blind hollow shaft
Shaft diameter	8 mm
Weight	0.2 kg
Shaft material	Stainless steel
Flange material	Aluminum
Housing material	Aluminum
Start up torque	0.8 Ncm (+20 °C)
Operating torque	0.6 Ncm (+20 °C)
Permissible movement static	± 0.3 mm (radial) ± 0.5 mm (axial)
Permissible movement dynamic	± 0.05 mm (radial) ± 0.1 mm (axial)
Operating speed	≤ 6,000 min^{-1} [1]
Moment of inertia of the rotor	40 gcm^2
Bearing lifetime	3 x 10^9 revolutions
Angular acceleration	≤ 500,000 rad/s^2

[1] Allow for self-heating of 3.3 K per 1,000 rpm when designing the operating temperature range.

Ambient data

EMC	According to EN 61000-6-2 and EN 61000-6-3
Enclosure rating	IP65, shaft side (IEC 60529) IP67, housing side (IEC 60529) [1]
Permissible relative humidity	90 % (Condensation not permitted)
Operating temperature range	–40 °C ... +85 °C
Storage temperature range	–40 °C ... +100 °C, without package
Resistance to shocks	100 g, 6 ms (EN 60068-2-27)
Resistance to vibration	30 g, 10 Hz ... 2,000 Hz (EN 60068-2-6)

[1] With mating connector fitted.

AFM60A-BBIB018x12 | AFS/AFM60 Ethernet

ABSOLUTE ENCODERS

Classifications

eCl@ss 5.0	27270502
eCl@ss 5.1.4	27270502
eCl@ss 6.0	27270590
eCl@ss 6.2	27270590
eCl@ss 7.0	27270502
eCl@ss 8.0	27270502
eCl@ss 8.1	27270502
eCl@ss 9.0	27270502
eCl@ss 10.0	27270502
eCl@ss 11.0	27270502
eCl@ss 12.0	27270502
ETIM 5.0	EC001486
ETIM 6.0	EC001486
ETIM 7.0	EC001486
ETIM 8.0	EC001486
UNSPSC 16.0901	41112113

Dimensional drawing (Dimensions in mm (inch))

Blind hollow shaft

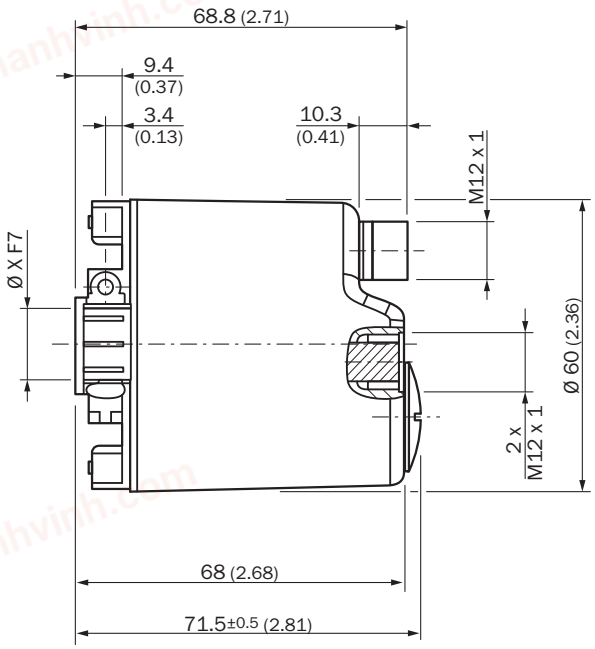

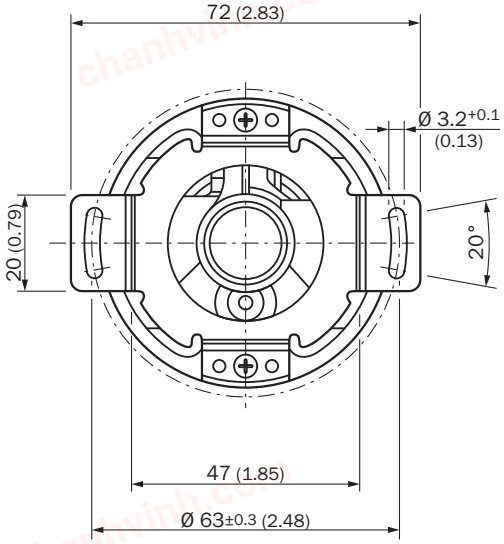

Diameter x f7 corresponds to the shaft diameter

chanhvinh.com

Attachment specifications

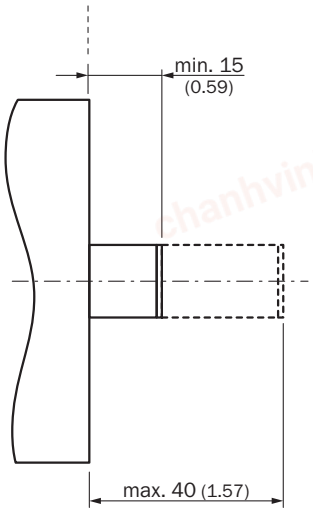

All dimensions in mm (inch)

PIN assignment

Male connector

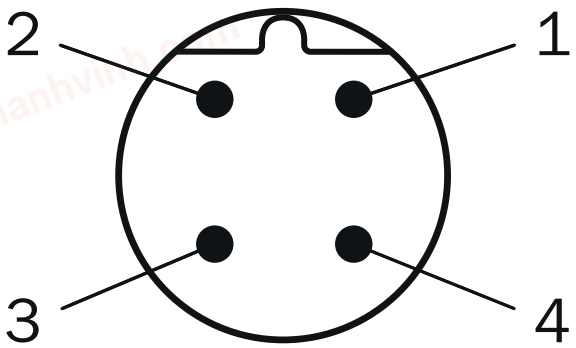

Supply voltage

PIN	Signal
1	10 V ... 30 V
2	Not assigned
3	GND
4	Not assigned

Female connector

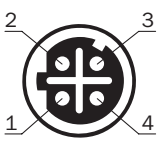

Port 1, Port 2

chanhvinh.com

PIN	Signal
1	T x D+
2	R x D+
3	T x D-
4	R x D-

Connection diagram

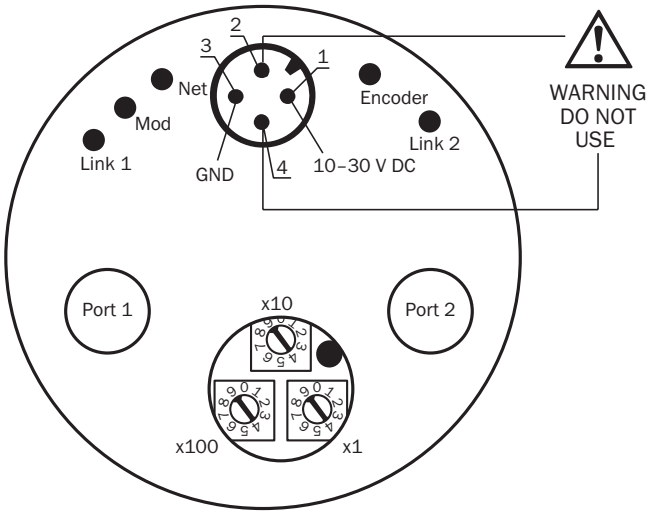

Recommended accessories

Other models and accessories ➜ www.sick.com/AFS_AFM60_Ethernet

	Brief description	Type	Part no.
Flanges			
	One-sided stator coupling, slot, slot radius 33 mm to 211.9 mm, slot width 5.1 mm	BEF-DS03DFS/VFS	2047431
Plug connectors and cables			
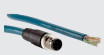	Head A: male connector, M12, 4-pin, straight, D-coded Head B: Flying leads Cable: Ethernet, PUR, halogen-free, shielded, 2 m	STL-1204-G02ME90	6045284
	Head A: male connector, M12, 4-pin, straight, D-coded Head B: Flying leads Cable: Ethernet, PUR, halogen-free, shielded, 5 m	STL-1204-G05ME90	6045285
	Head A: male connector, M12, 4-pin, straight, D-coded Head B: Flying leads Cable: Ethernet, PUR, halogen-free, shielded, 10 m	STL-1204-G10ME90	6045286
	Head A: male connector, M12, 4-pin, angled, D-coded Head B: Flying leads Cable: Ethernet, PUR, halogen-free, shielded, 2 m	STL-1204-W02ME90	6047912

chanhvinh.com

	Brief description	Type	Part no.
	Head A: male connector, M12, 4-pin, angled, D-coded Head B: Flying leads Cable: Ethernet, PUR, halogen-free, shielded, 5 m	STL-1204-W05ME90	6047913
	Head A: male connector, M12, 4-pin, angled, D-coded Head B: Flying leads Cable: Ethernet, PUR, halogen-free, shielded, 10 m	STL-1204-W10ME90	6047914
	Head A: male connector, M12, 4-pin, angled, D-coded Head B: Flying leads Cable: Ethernet, PUR, halogen-free, shielded, 25 m	STL-1204-W25ME90	6047915
	Head A: female connector, M12, 4-pin, straight, A-coded Head B: Flying leads Cable: Sensor/actuator cable, PUR, halogen-free, unshielded, 2 m	YF2A14-020UB3XLEAX	2095607
	Head A: female connector, M12, 4-pin, straight, A-coded Head B: Flying leads Cable: Sensor/actuator cable, PUR, halogen-free, unshielded, 5 m	YF2A14-050UB3XLEAX	2095608
	Head A: female connector, M12, 4-pin, straight, A-coded Head B: Flying leads Cable: Sensor/actuator cable, PUR, halogen-free, unshielded, 10 m	YF2A14-100UB3XLEAX	2095609
	Head A: female connector, M12, 4-pin, straight, A-coded Head B: Flying leads Cable: Sensor/actuator cable, PUR, halogen-free, unshielded, 25 m	YF2A14-250UB3XLEAX	2095615
	Head A: female connector, M12, 4-pin, angled, A-coded Head B: Flying leads Cable: Sensor/actuator cable, PUR, halogen-free, unshielded, 2 m	YG2A14-020UB3XLEAX	2095766
	Head A: female connector, M12, 4-pin, angled, A-coded Head B: Flying leads Cable: Sensor/actuator cable, PUR, halogen-free, unshielded, 5 m	YG2A14-050UB3XLEAX	2095767
	Head A: female connector, M12, 4-pin, angled, A-coded Head B: Flying leads Cable: Sensor/actuator cable, PUR, halogen-free, unshielded, 10 m	YG2A14-100UB3XLEAX	2095768
	Head A: female connector, M12, 4-pin, angled, A-coded Head B: Flying leads Cable: Sensor/actuator cable, PUR, halogen-free, unshielded, 25 m	YG2A14-250UB3XLEAX	2095771
	Head A: male connector, M12, 4-pin, straight, D-coded Head B: male connector, M12, 4-pin, straight, D-coded Cable: Ethernet, PUR, halogen-free, shielded, 2 m	SSL-1204-G02ME90	6045222
	Head A: male connector, M12, 4-pin, straight, D-coded Head B: male connector, M12, 4-pin, straight, D-coded Cable: Ethernet, PUR, halogen-free, shielded, 5 m	SSL-1204-G05ME90	6045277
	Head A: male connector, M12, 4-pin, straight, D-coded Head B: male connector, M12, 4-pin, straight, D-coded Cable: Ethernet, PUR, halogen-free, shielded, 10 m	SSL-1204-G10ME90	6045279
	Head A: male connector, M12, 4-pin, straight, D-coded Head B: male connector, RJ45, 8-pin, straight Cable: Ethernet, PUR, halogen-free, shielded, 2 m	SSL-2J04-G02ME60	6047916
	Head A: male connector, M12, 4-pin, straight, D-coded Head B: male connector, RJ45, 8-pin, straight Cable: Ethernet, PUR, halogen-free, shielded, 5 m	SSL-2J04-G05ME60	6047917
	Head A: male connector, M12, 4-pin, straight, D-coded Head B: male connector, RJ45, 8-pin, straight Cable: Ethernet, PUR, halogen-free, shielded, 10 m	SSL-2J04-G10ME60	6047918
	Head A: male connector, M12, 4-pin, angled, D-coded Head B: male connector, RJ45, 8-pin, straight Cable: Ethernet, PUR, halogen-free, shielded, 2 m	SSL-2J04-H02ME	6047911

chanhvinh.com

AFM60A-BBIB018x12 | AFS/AFM60 Ethernet

ABSOLUTE ENCODERS

	Brief description	Type	Part no.
	Head A: male connector, M12, 4-pin, angled, D-coded Head B: male connector, RJ45, 8-pin, straight Cable: Ethernet, PUR, halogen-free, shielded, 5 m	SSL-2J04-H05ME	6045287
	Head A: male connector, M12, 4-pin, angled, D-coded Head B: male connector, RJ45, 8-pin, straight Cable: Ethernet, PUR, halogen-free, shielded, 10 m	SSL-2J04-H10ME	6045288
	Head A: female connector, M12, 4-pin, straight, D-coded Cable: Ethernet, shielded	DOS-1204-GE	6048153
	Head A: female connector, M12, 4-pin, angled Cable: unshielded	DOS-1204-W	6007303
	Head A: female connector, M12, 4-pin, angled, D-coded Cable: Ethernet, shielded	DOS-1204-WE	6048154
	Head A: male connector, RJ45, 8-pin, straight Cable: EtherNet/IP™, shielded	STE-0J08-GE	6048150
	Head A: male connector, M12, 4-pin, straight, D-coded Cable: Ethernet, shielded	STE-1204-GE01	6048151
	Head A: male connector, M12, 4-pin, angled, D-coded Cable: Ethernet, shielded	STE-1204-WE	6048152
	Head A: female connector, M12, 4-pin, D-coded Head B: female connector, RJ45, 8-pin Cable: Ethernet, shielded Cabinet through	Feedthrough female connector Ethernet RJ45	6048180

chanhvinh.com

SICK AT A GLANCE

SICK is one of the leading manufacturers of intelligent sensors and sensor solutions for industrial applications. A unique range of products and services creates the perfect basis for controlling processes securely and efficiently, protecting individuals from accidents and preventing damage to the environment.

We have extensive experience in a wide range of industries and understand their processes and requirements. With intelligent sensors, we can deliver exactly what our customers need. In application centers in Europe, Asia and North America, system solutions are tested and optimized in accordance with customer specifications. All this makes us a reliable supplier and development partner.

Comprehensive services complete our offering: SICK LifeTime Services provide support throughout the machine life cycle and ensure safety and productivity.

For us, that is “Sensor Intelligence.”

WORLDWIDE PRESENCE:

Contacts and other locations –www.sick.com