chanhvinh.com

Near UV LED - 365nm

UV Z5 High Power series

CUN66A1G



RoHS

Product Brief

Description

- High power UV LED series are designed for high current operation and high power output applications.
- It incorporates with the state of the art SMD design.
- Z5 NUV LED is an ideal UV light source for curing, printing, and detecting applications

Features and Benefits

- High power output
- Designed for high current operation
- SMT type
- Lead Free product
- RoHS compliant

Key Applications

- UV Curing
- Printing
- Coating
- Adhesive
- Counterfeit Detection / Security
- UV Torch
- Fluorescence Photography
- Dental Curing
- Crime Inspection
- Oil leak Detection

chanhvinh.com

Table of Contents

Index

- Product Brief
- Table of Content
- Performance Characteristics
- Characteristics Graph
- Binning Structure
- Mechanical Dimensions
- Recommended Solder Pad
- Reflow Soldering Characteristics
- Emitter Tape & Reel Packaging
- Handling of Silicone Resin for LEDs
- Precaution for Use
- Company Information

chanhvinh.com

Performance Characteristics

Table 1. Electro - Optical characteristic at 1A

(T_s=25℃, RH=30%)

Parameter	Symbol	Value	Unit
Peak wavelength [1]	λ_p	367	nm
Radiant Flux[2]	Φ_e[3]	1.85	W
Forward Voltage [4]	V_F	3.7	V
Spectrum Half Width	$\Delta\lambda$	9	nm
Radiation Angle	θ	125	deg.

Table 2. Absolute Maximum Rating

Parameter	Symbol	Value			Unit
		Min.	Typ.	Max.	
Forward Current	I_F	0.2	1.0	1.2	A
Junction Temperature	T_j	-	-	90	ºC
Operating Temperature	T_{opr}	- 40	-	75	ºC
Storage Temperature	T_{stg}	- 40	-	100	ºC
Thermal resistance (J to S) [5]	$R\theta_{J-s}$	-	4.6	-	ºC/W

Notes :

1. Peak Wavelength Measurement tolerance : ±3nm
2. Radiant Flux Measurement tolerance : ± 10%
3. Φ_e is the Total Radiant Flux as measured with an integrating sphere.
4. Forward Voltage Measurement tolerance : ±3%
5. $R\theta_{J-S}$ is the thermal resistance between chip junction to solder. Cathode solder joint was used as a measurement of solder joint temperature(Ts).
   Using metal PCB (Dielectric 2W/m·K layer and 2oz of cladding Cu)

- Calculated performance values are for reference only.
- All measurements were made under the standardized environment of Seoul Viosys.
- Thermal resistance can be increased substantially depending on the heat sink design/operating condition, and the maximum possible driving current will decrease accordingly.

chanhvinh.com

Characteristics Graph

Fig 1. Spectrum, T_s=25℃, I_F=1A

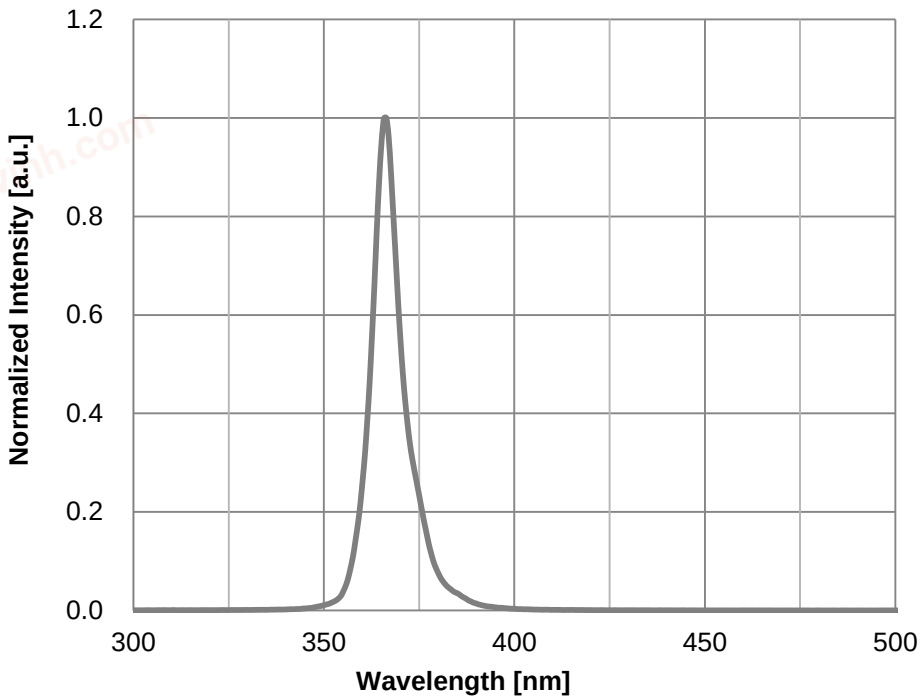

Fig 2. Forward Voltage vs. Forward Current, T_s=25℃

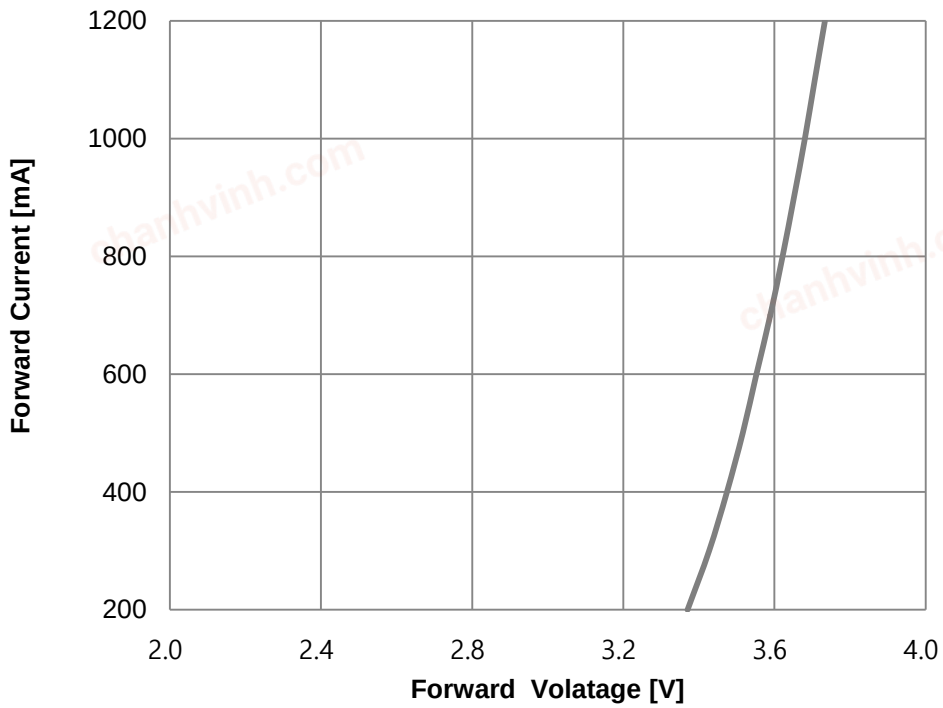

chanhvinh.com

Characteristics Graph

Fig 3. Forward Current vs. Relative Radiant Flux, T_s=25℃

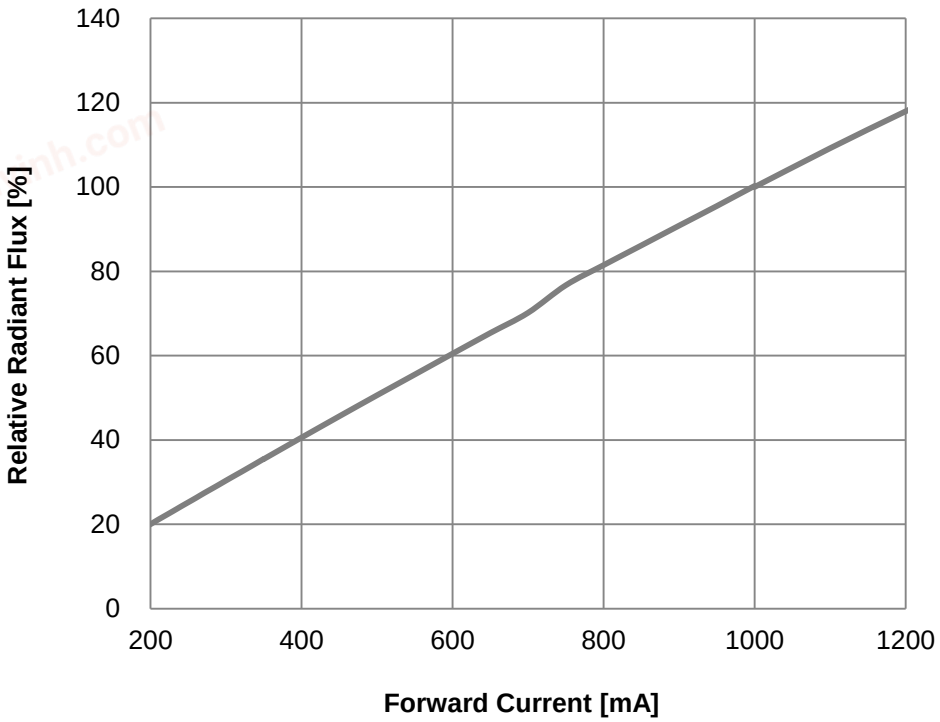

Fig 4. Forward Current vs. Peak Wavelength, T_s=25℃

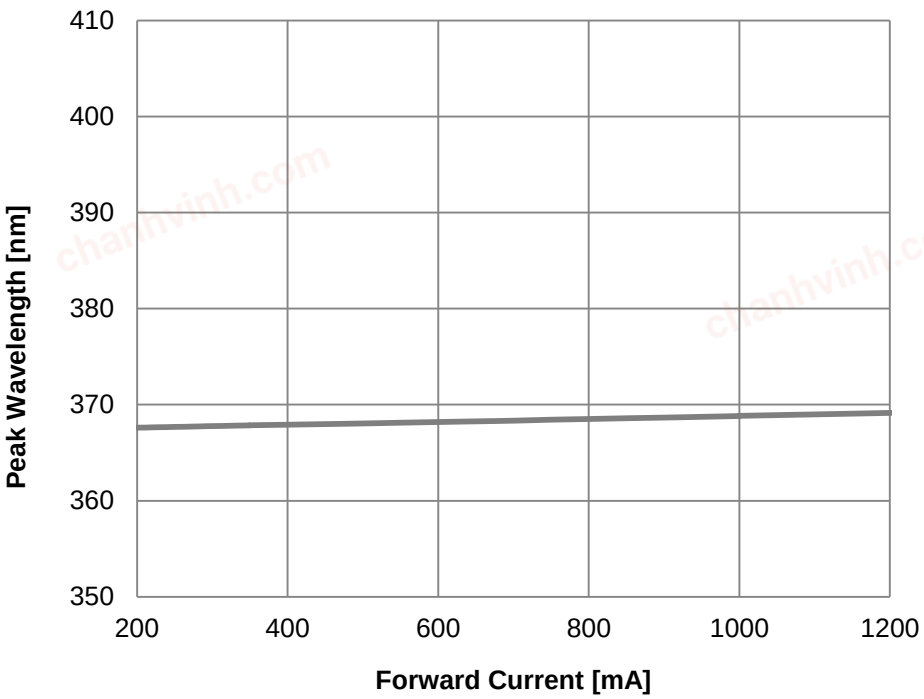

chanhvinh.com

Characteristics Graph

Fig 5. Solder Joint Temperature vs. Relative Radiant Flux, I_F=1A

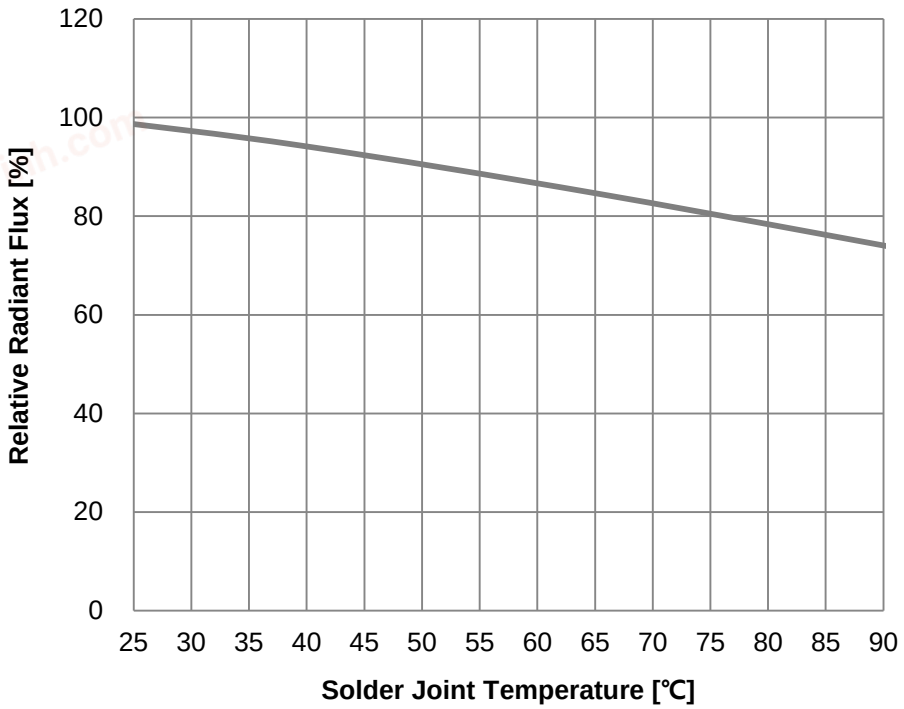

Fig 6. Solder Joint Temperature vs. Peak Wavelength, I_F=1A

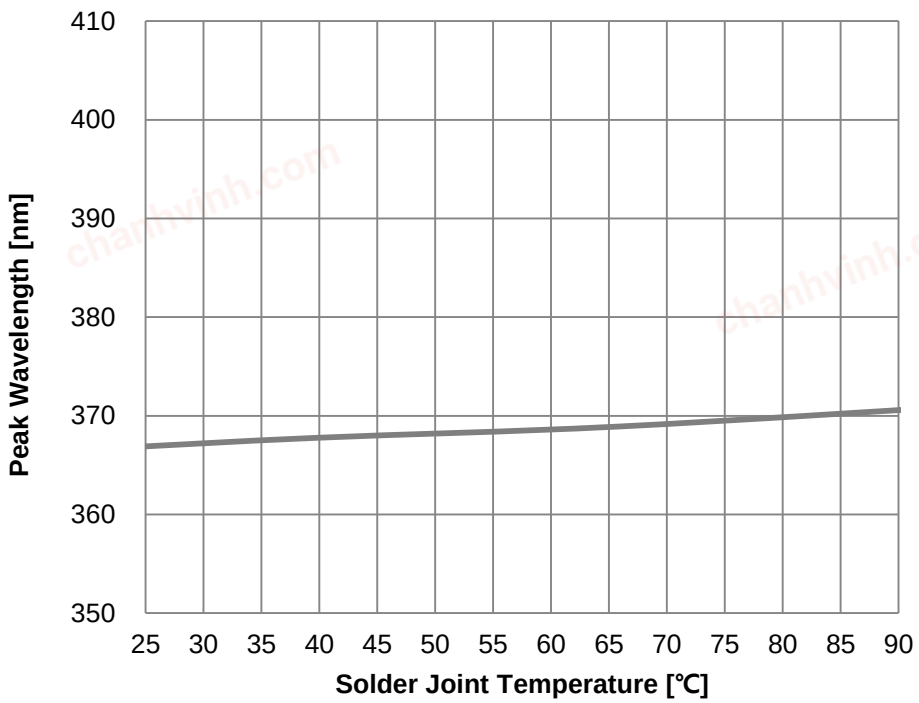

chanhvinh.com

Characteristics Graph

Fig 7. Solder Joint Temperature vs. Forward Voltage, I_F=1A

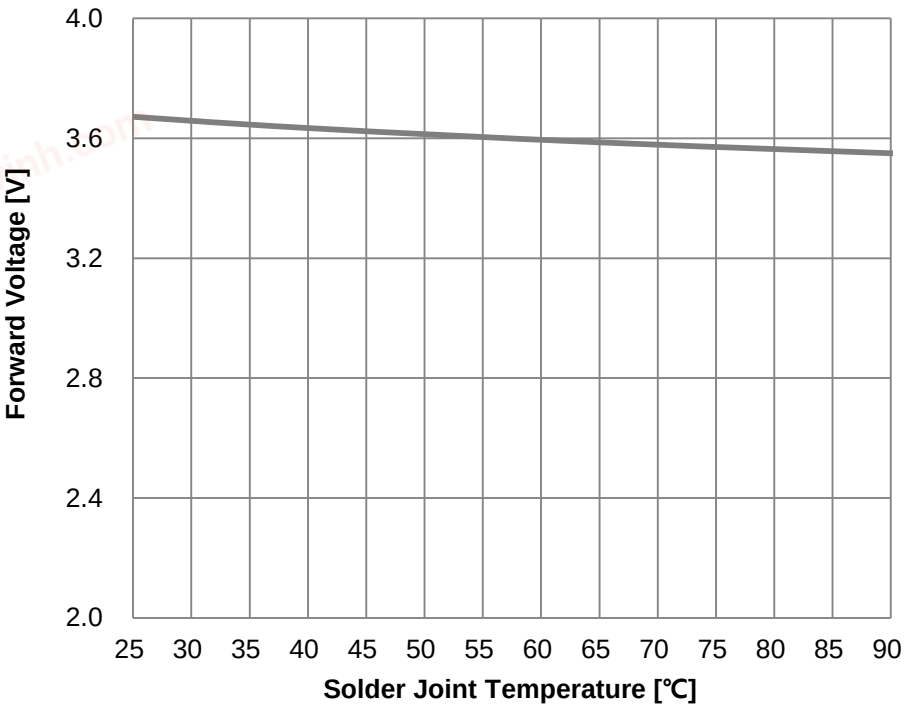

Fig 8. Typical Spatial Distribution, I_F=1A

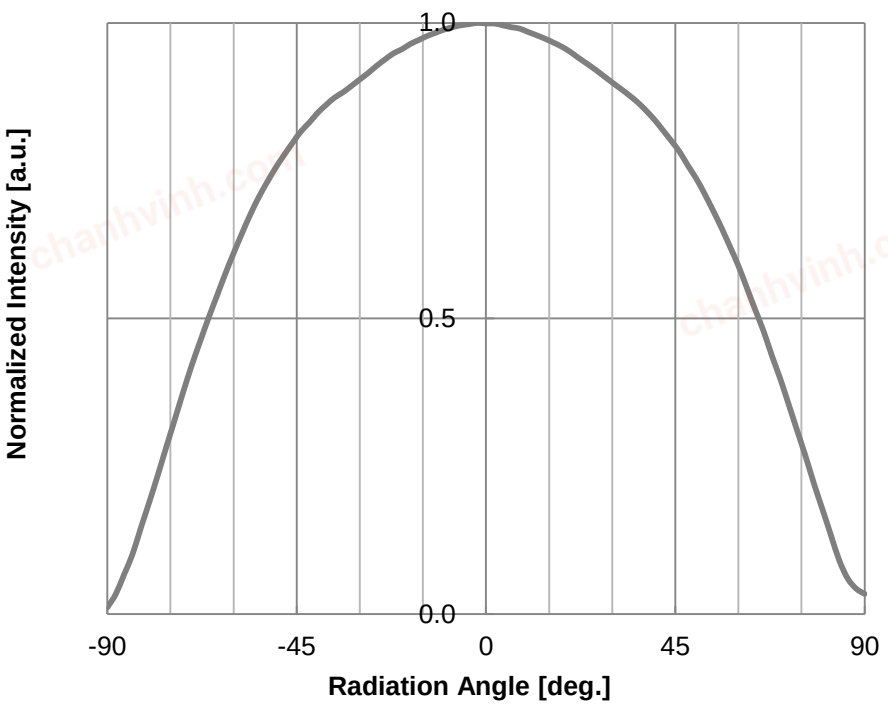

chanhvinh.com

Characteristics Graph

Fig 9. Forward Current vs. Solder Joint Temperature, Tj_{max} = 90℃

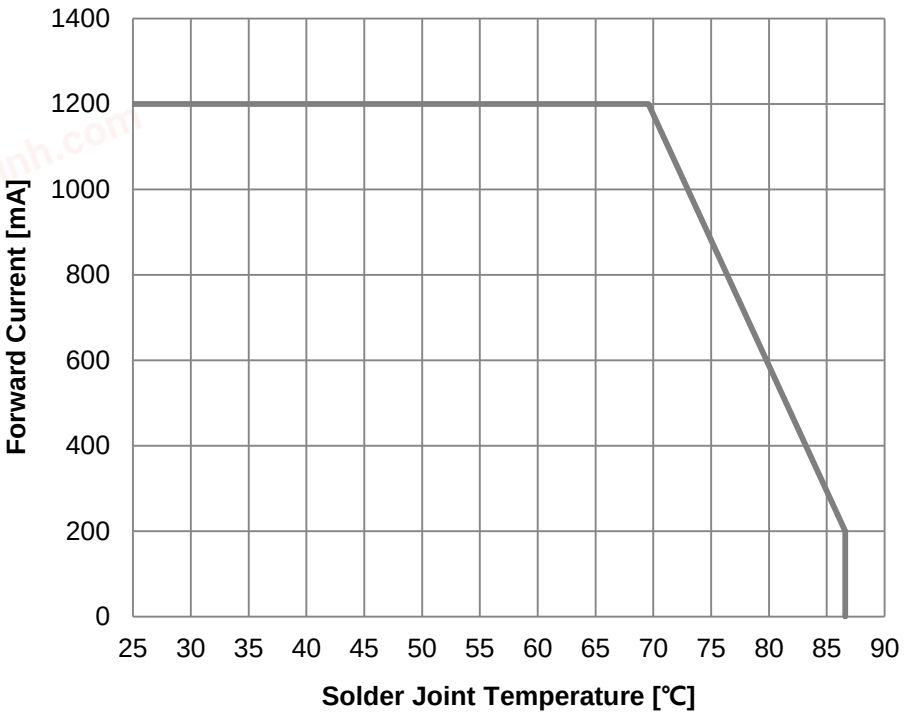

chanhvinh.com

Binning Structure

Table 3. Binning Structure, I_F= 1A

Z_1			$Z_2Z_3Z_4$			Z_5Z_6		
Wp [nm]			Radiant Flux [W]			Vf [V]		
BIN	MIN	MAX	BIN	MIN	MAX	BIN	MIN	MAX
j	360	370	Q76	1.76	1.94	Z6	3.5	3.6
			Q94	1.94	2.14	Z7	3.6	3.7
			R14	2.14	2.36	Z8	3.7	3.8

Table 4. Ranks :

Binning Code	Description	Unit
Z_1	Peak Wavelength	nm
$Z_2Z_3Z_4$	Radiant Flux	W
Z_5Z_6	Forward Voltage	V

Notes :

1. Peak Wavelength Measurement tolerance : ±3nm
2. Radiant Flux Measurement tolerance : ± 10%
3. Forward Voltage Measurement tolerance : ±3%

- All measurements were made under the standardized environment of Seoul Viosys.

chanhvinh.com

Mechanical Dimensions

Top View

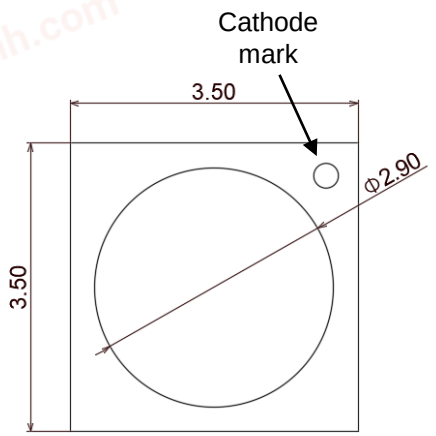

Bottom View

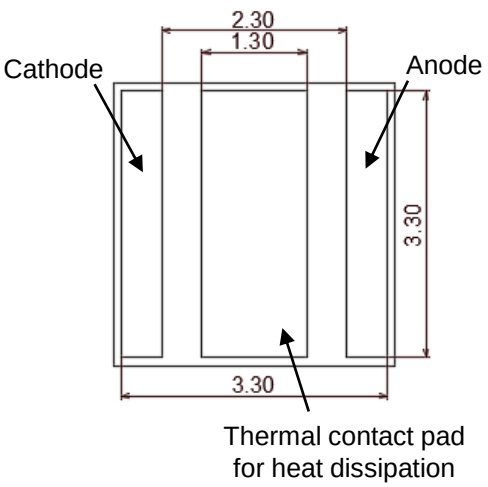

Side View

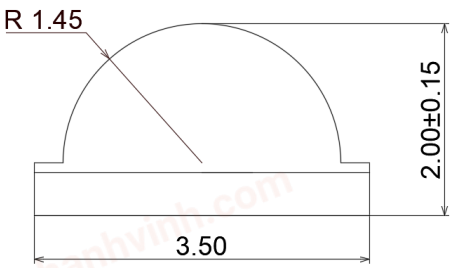

Circuit

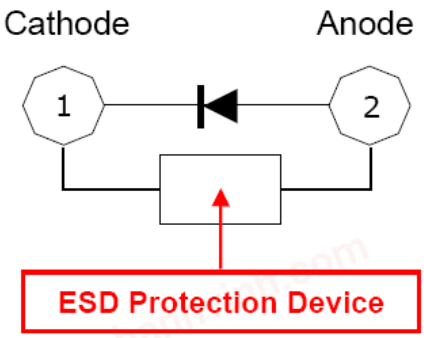

Note :

1. All dimensions are in millimeters.
2. Scale : none
3. Undefined tolerance is ±0.1mm

chanhvinh.com

Recommended Solder Pad

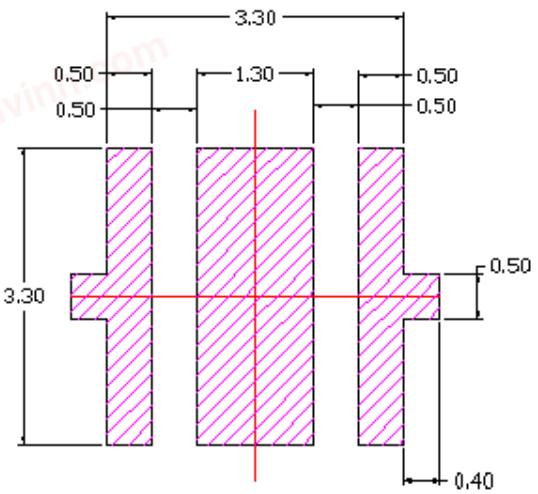

Recommended PCB Solder Pad

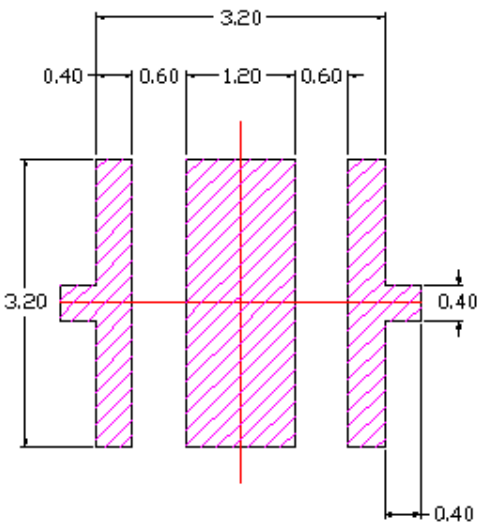

Recommended Stencil Pattern

Note :

1. All dimensions are in millimeters.
2. Scale : none
3. Undefined tolerance is ±0.2mm
4. This drawing is without tolerance. It is for reference only
5. Be careful not to get flux on the led in the usage of flux.

chanhvinh.com

Reflow Soldering Characteristics

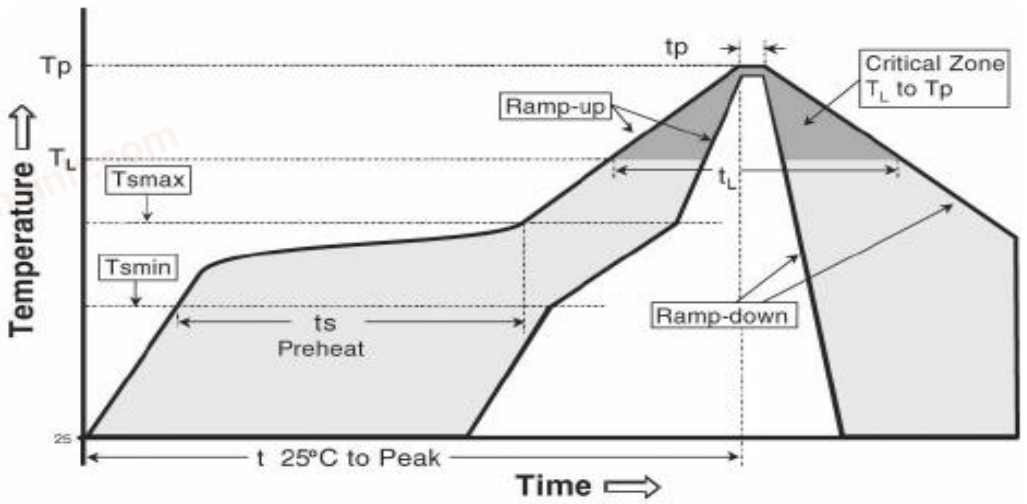

Profile Feature	Sn-Pb Eutectic Assembly	Pb-Free Assembly
Average ramp-up rate (Ts_{max} to Tp)	3℃/second max.	3℃/second max.
Preheat - Temperature Min (Ts_{min}) - Temperature Max (Ts_{max}) - Time (Ts_{min} to Ts_{max}) (ts)	 100 ℃ 150 ℃ 60-120 seconds	 150 ℃ 200 ℃ 60-180 seconds
Time maintained above: - Temperature (T_L) - Time (t_L)	 183 ℃ 60-150 seconds	 217 ℃ 60-150 seconds
Peak Temperature (Tp)	215 ℃	260 ℃
Time within 5℃ of actual Peak Temperature (tp)	10-30 seconds	20-40 seconds
Ramp-down Rate	6 ℃/second max.	6 ℃/second max.
Time 25℃ to Peak Temperature	6 minutes max.	8 minutes max.

Caution

1. Reflow soldering is not recommended to be done more than twice. In the case of second soldering it should be done within 24 hours after first soldering.
2. Die slug should be soldered.
3. Do not put a stress on the LEDs during soldering.
4. Do not bend the circuit board after soldering.

chanhvinh.com

Emitter Tape & Reel Packaging

CATHODE MARK

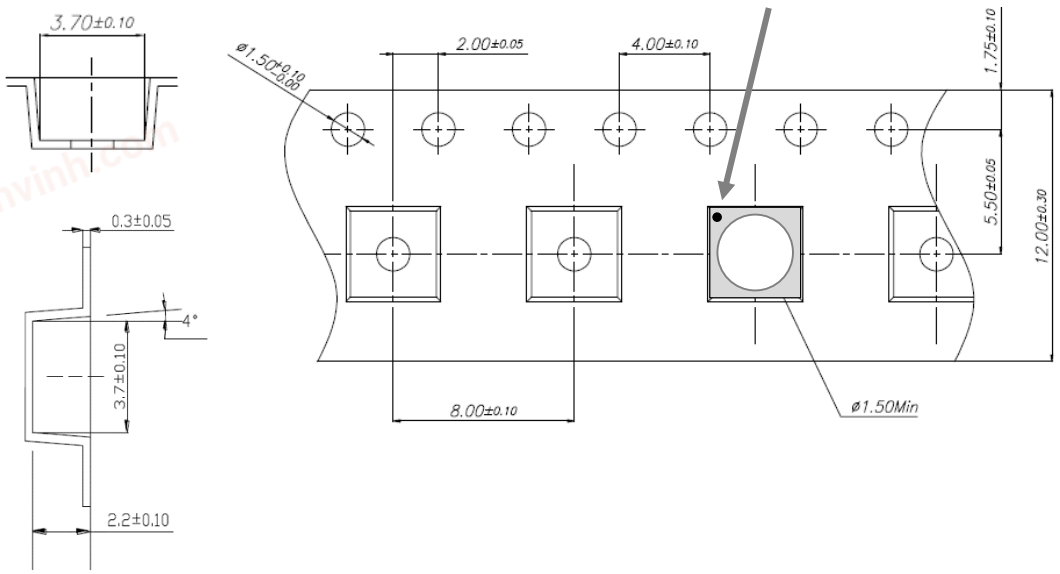

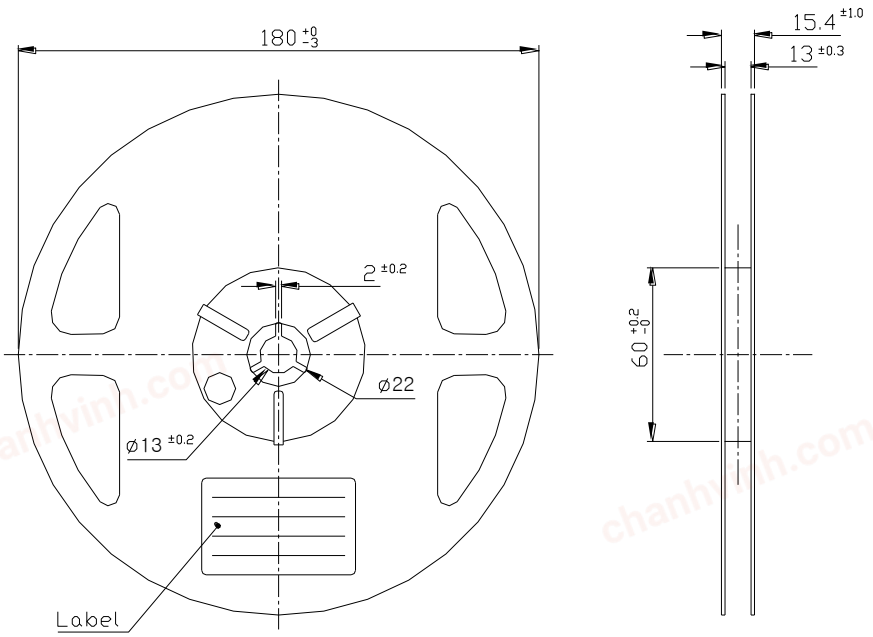

Notes:

1. Quantity : 500pcs/Reel
2. Cumulative Tolerance : Cumulative Tolerance/10 pitches to be ±0.2mm
3. Adhesion Strength of Cover Tape : Adhesion strength to be 10-60g when the cover tape is turned off from the carrier tape at the angle of 10º to the carrier tape

chanhvinh.com

Emitter Tape & Reel Packaging

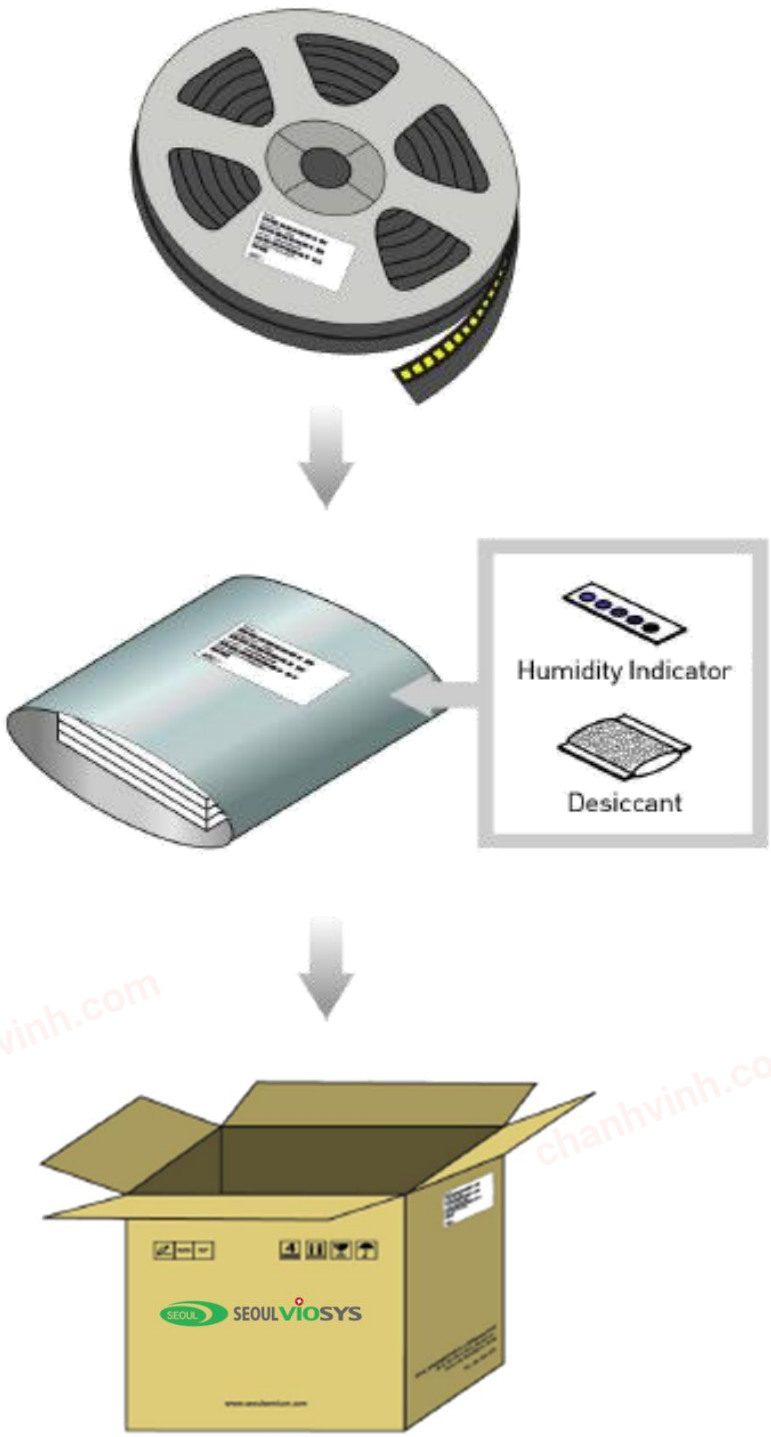

chanhvinh.com

Product Nomenclature

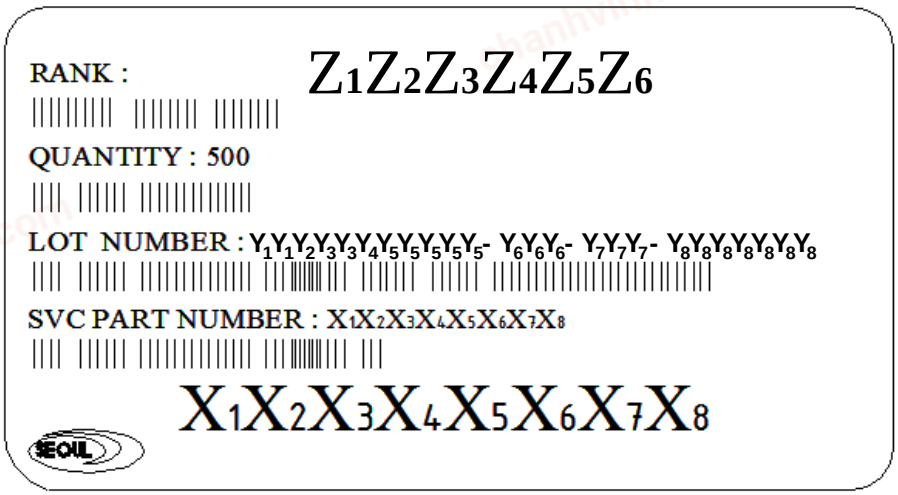

Table 5. Part Numbering System: $X_1X_2X_3X_4X_5X_6X_7X_8$

Part Number Code	Description	Part Number	Value
X_1	Company	C	SVC
X_2	UV LED	U	
X_3X_4	Wavelength	N6	Near UV 365nm
X_5	Package Series	6	Z5
X_6	Lens type	A	Dome-wide
X_7	Chip Q'ty	1	1 chip
X_8	Version	G	Ver. 7

Table 6. Lot Numbering System: $Y_1Y_1Y_2Y_3Y_3Y_4Y_5Y_5Y_5Y_5Y_5$- $Y_6Y_6Y_6$- $Y_7Y_7Y_7$- $Y_8Y_8Y_8Y_8Y_8Y_8Y_8$

Lot Number Code	Description
Y_1	Year
Y_2	Month
Y_3	Day
Y_4	Production area
Y_5	Mass order
Y_6	Taping number
Y_7	Reel number
Y_8	Internal management number

chanhvinh.com

Reliability Test

Table 7. Test Result

Test Item	Test Condition	Note	Criteria	# Failed /Tested
Room Temp. Operational Life	Ta=25℃, IF=1A	1000hrs	A B D	0/10
High Temperature Storage	Ta=100ºC	1000hrs	A B D	0/22
Low Temperature Storage	Ta=-40ºC	1000hrs	A B D	0/22
Thermal shock	Ta max=120℃, Ta min=-40℃ 30min dwell/transfer time : 10sec, 1 cycle=1hr	200 cycles	C D	0/22
Resistance to Soldering	Temp=260±5℃, Time : 10±1 sec	1 time	D	0/22
Solderability	Temp=260±5℃, 95% Coverage	1 time	D	0/22
ESD	R=1.5kΩ, C=100pF Voltage level=2kV	3 times Negative /positive	C D	0/22

Table 8. Failure Criteria

No	Parameter	Symbol	Failure Standard
A	**Forward Voltage**	V_F	Initial measurement ± 20%
B	**Radiant Flux**	Φ_e	Initial measurement - 30%
C	**Turn On**	-	pass / fail
D	**Visual Inspection**	-	pass / fail

Notes :

1. The value is measured after the test sample is cooled down to the room temperature.

chanhvinh.com

Handling of Silicone Resin for LEDs

(1) During processing, mechanical stress on the surface should be minimized as much as possible. Sharp objects of all types should not be used to pierce the sealing compound.





(2) In general, LEDs should only be handled from the side. By the way, this also applies to LEDs without a silicone sealant, since the surface can also become scratched.

(3) When populating boards in SMT production, there are basically no restrictions regarding the form of the pick and place nozzle, except that mechanical pressure on the surface of the resin must be prevented. This is assured by choosing a pick and place nozzle which is larger than the LED's reflector area.

(4) Silicone differs from materials conventionally used for the manufacturing of LEDs. These conditions must be considered during the handling of such devices. Compared to standard encapsulants, silicone is generally softer, and the surface is more likely to attract dust. As mentioned previously, the increased sensitivity to dust requires special care during processing. In cases where a minimal level of dirt and dust particles cannot be guaranteed, a suitable cleaning solution must be applied to the surface after the soldering of components.

(5) SVC suggests using isopropyl alcohol for cleaning. In case other solvents are used, it must be assured that these solvents do not dissolve the package or resin. Ultrasonic cleaning is not recommended. Ultrasonic cleaning may cause damage to the LED.

(6) Please do not mold this product into another resin (epoxy, urethane, etc) and do not handle this product with acid or sulfur material in sealed space.

(7) Avoid leaving fingerprints on silicone resin parts.

(8) Silicone lens are sticky. During the SMT process, LED may adhere to the cover or can be rotated. So SMT conditions must be adjusted. Please slow down the feeding speed. It can reduce the sticking problem.

chanhvinh.com

Precaution for Use

(1) Storage

To avoid the moisture penetration, we recommend storing LEDs in a dry box with a desiccant . The recommended storage temperature range is 5℃ to 30℃ and a maximum humidity of RH50%.

(2) Use Precaution after Opening the Packaging

Use proper SMD techniques when the LED is to be soldered dipped as separation of the lens may affect the light output efficiency.

Pay attention to the following:

a. Recommend conditions after opening the package

- Sealing / Temperature : 5 ~ 30℃ Humidity : less than RH60%

b. If the package has been opened more than 4 weeks (MSL 2a) or the color of the desiccant changes, components should be dried for 10-24hr at 65±5℃

(3) Do not apply mechanical force or excess vibration during the cooling process to normal temperature after soldering.

(4) Do not rapidly cool device after soldering.

(5) Components should not be mounted on warped (non coplanar) portion of PCB.

(6) Radioactive exposure is not considered for the products listed here in.

(7) This device should not be used in any type of fluid such as water, oil, organic solvent and etc. When washing is required, IPA (Isopropyl Alcohol) should be used.

(8) When the LEDs are in operation the maximum current should be decided after measuring the package temperature.

(9) LEDs must be stored in a clean environment. We recommend LEDs store in nitrogen-filled container.

(10) The appearance and specifications of the product may be modified for improvement without notice.

chanhvinh.com

Precaution for Use

(11) VOCs (Volatile organic compounds) emitted from materials used in the construction of fixtures ca n penetrate silicone encapsulants of LEDs and discolor when exposed to heat and photonic energy. T he result can be a significant loss of light output from the fixture. Knowledge of the properties of the m aterials selected to be used in the construction of fixtures can help prevent these issues.

(12) The slug is electrically isolated.

(13) Attaching LEDs, do not use adhesives that outgas organic vapor.

(14) The driving circuit must be designed to allow forward voltage only when it is ON or OFF. If the rev erse voltage is applied to LED, migration can be generated resulting in LED damage.

(15) LEDs are sensitive to Electro-Static Discharge (ESD) and Electrical Over Stress (EOS). Below is a list of suggestions that Seoul Viosys purposes to minimize these effects.

a. ESD (Electro Static Discharge)

Electrostatic discharge (ESD) is the defined as the release of static electricity when two objects come into contact. While most ESD events are considered harmless, it can be an expensive problem in many industrial environments during production and storage. The damage from ESD to an LEDs may cause the product to demonstrate unusual characteristics such as:

- Increase in reverse leakage current lowered turn-on voltage
- Abnormal emissions from the LED at low current

The following recommendations are suggested to help minimize the potential for an ESD event.
One or more recommended work area suggestions:

- Ionizing fan setup
- ESD table/shelf mat made of conductive materials
- ESD safe storage containers

One or more personnel suggestion options:
- Antistatic wrist-strap
- Antistatic material shoes
- Antistatic clothes

Environmental controls:
- Humidity control (ESD gets worse in a dry environment)

chanhvinh.com

Precaution for Use

b. EOS (Electrical Over Stress)

Electrical Over-Stress (EOS) is defined as damage that may occur when an electronic device is subjected to a current or voltage that is beyond the maximum specification limits of the device. The effects from an EOS event can be noticed through product performance like:

- Changes to the performance of the LED package
  (If the damage is around the bond pad area and since the package is completely encapsulated the package may turn on but flicker show severe performance degradation.)
- Changes to the light output of the luminaire from component failure
- Components on the board not operating at determined drive power

Failure of performance from entire fixture due to changes in circuit voltage and current across total circuit causing trickle down failures. It is impossible to predict the failure mode of every LED exposed to electrical overstress as the failure modes have been investigated to vary, but there are some common signs that will indicate an EOS event has occurred:

- Damaged may be noticed to the bond wires (appearing similar to a blown fuse)
- Damage to the bond pads located on the emission surface of the LED package
  (shadowing can be noticed around the bond pads while viewing through a microscope)
- Anomalies noticed in the encapsulation and phosphor around the bond wires.
- This damage usually appears due to the thermal stress produced during the EOS event.

c. To help minimize the damage from an EOS event Seoul Viosys recommends utilizing:

- A surge protection circuit
- An appropriately rated over voltage protection device
- A current limiting device

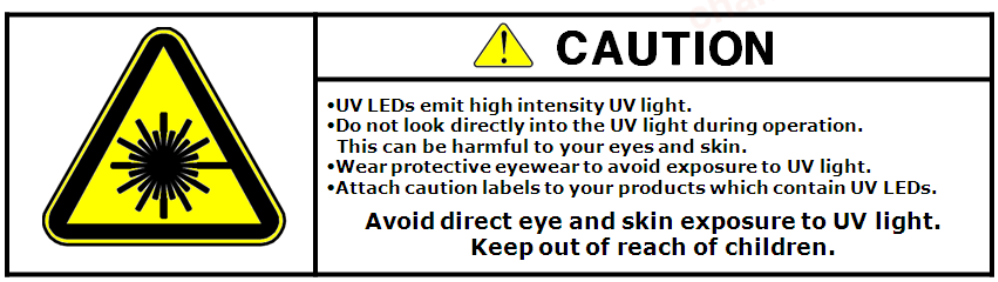

chanhvinh.com

Company Information

Published by

Seoul Viosys © 2013 All Rights Reserved.

Company Information

Seoul Viosys (www.seoulviosys.com) manufactures light emitting diodes (LEDs) with a full range of UV wavelengths from UVC to UVA (under 400nm) for Industrial Curing, Air/Water Purification, Disinfection and Home appliance.

The company is one of the world leading UV LED supplier, holding more than 4,000 patents globally, while offering various kinds of LED technologies and application-solutions in High power UV LED, UV sensor, UV LED Lamp and variety of UV LED sourced Applications.

The company's broad product portfolio includes hybrid modules for unique applications such as UV disinfection, deodorization, UV purification as well as customized modules for your Application.

Legal Disclaimer

Information in this document is provided in connection with Seoul Viosys products. With respect to any examples or hints given herein, any typical values stated herein and/or any information regarding the application of the device, Seoul Viosys hereby disclaims any and all warranties and liabilities of any kind, including without limitation, warranties of non-infringement of intellectual property rights of any third party. The appearance and specifications of the product can be changed to improve the quality and/or performance without notice.