chanhvinh.com

Sensata Technologies

LN SERIES

AC OUTPUT LOW NOISE SOLID STATE RELAYS

The LN Series of panel mounted Solid State Relays offer reliable back-to-back SCR switching up to 75 Amps at 528 VAC, coupled with a patented trigger circuit design which allows the SSR to switch resistive loads with minimal electromagnetic noise generated, ideal for use in commercial, residential and medical applications.
UL recognized and TUV certified, the LN series offers superior performance in applications that demand reliable switching and low emitted noise.



Features

- Rating up to 75A @48-528 VAC per channel
- Zero Voltage Turn-On Switching
- Conformance with IEC60947-4-3 Environment B for low voltage domestic, commercial and light industrial locations/installations
- Patented Low Noise trigger circuit
- IP20 touch-safe housing is available
- Built-in Input/Output over-voltage protection
- LED Input Status Indicator
- 3500 VAC Optical isolation
- EMC Compliant to level III

Applications

- Commercial ovens
- Professional cooking equipment
- Household appliances
- Medical equipment

LOW NOISE

PRODUCT SELECTION

Output Voltage	25 A	50 A	75 A
24-280 VAC	LND2425	LND2450	LND2475
48-528 VAC	LND4425	LND4450	LND4475

SPECIFICATIONS

Output Voltage (1)

Description	LND24XX	LND44XX
Operating Voltage (47-63Hz) [V_{RMS}]	24-280	48-528
Transient Overvoltage [Vpk] (2)	500	800
Maximum Off-State Leakage Current @ Rated Voltage [mA_{RMS}]	1	1
Zero Crossing Level Maximum [Vpk]	20	
Minimum Off-State dV/dt @ Maximum Rated Voltage [V/µsec]	500	

Copyright © 2019 Sensata Technologies, Inc.

crydom

Output [1]

Description	LNDXX25	LNDXX50	LNDXX75
Load Current, LC A IEC62314 @ Ue=480VAC, 40°C [A_{RMS}] [3]	25	50	75
Minimum Load Current [mA_{RMS}]	100		
Maximum 1 Cycle Surge Current (50/60Hz) [Apk]	239/250	597/625	1145/1200
1 Second surge current (Apk. Ta=25°C) 50/60 Hz	85	150	225
Maximum On-State Voltage Drop @ Rated Current [V_{rms}]	1.3	1.25	1.15
Maximum 1/2 Cycle I^2t for Fusing (50/60Hz) [A^2 sec]	285/259	1770/1621	6560/5976
Thermal Resistance Junction to Case (Rjc) [°C/W]	0.8	0.45	0.27
Maximum Power Dissipation @Rated Current [W]	32.5	62.5	86.25
Recomended Heat Sink for Rated Current @40°C [°C/W]	2	1	0.7
Minimum Power Factor (at Maximum load)	0.7		

Input [1]

Description	LND24XX	LND44XX
Control Voltage Range [VDC] [4]	4.8 - 32	
Maximum Reverse Voltage [VDC]	32	
Minimum Turn-On Voltage [VDC]	4.8	
Minimum Turn-Off Voltage [VDC]	1.1	
Minimum Input Current (for on-state) [mA]	8	15
Maximum Input Current [mA]	16	27
Nominal Input Impedance [Ω]	Current Regulated	
Maximum Turn-On Time	1/2 Cycle	
Maximum Turn-Off Time	1/2 Cycle	

General [1]

Description	Parameters
Dielectric Strength, Input to Output (50/60Hz) [V_{RMS}]	3500
Dielectric Strength, Input/Output to Case (50/60Hz) [V_{RMS}]	4000
Minimum Insulation Resistance (@ 500 VDC) [Ω]	10^9
Maximum Capacitance, Input/Output [pF]	12
Ambient Operating Temperature Range [°C] [5]	-40 to 80
Ambient Storage Temperature Range [°C] [5]	-40 to 100
Weight (typical) [oz/g]	2.6/74.9

Copyright © 2019 Sensata Technologies, Inc.

chanhvinh.com

Housing Material	UL94 V-0
Baseplate Material	Aluminum
Input Terminal Screw Torque Range [lb-in/ Nm]	13-15/1.5-1.7
Load Terminal Screw Torque Range [lb-in/ Nm]	18-20/2-2.2
SSR Mounting Screw Torque Range [lb-in/ Nm]	18-20/2-2.3
Humidity per IEC60068-2-78	93% non-condensing
LED Input Status Indicator	Green
Overvoltage Category	III
Impulse Withstand Voltage according to IEC 60664-1	6kV

THERMAL DERATE INFORMATION

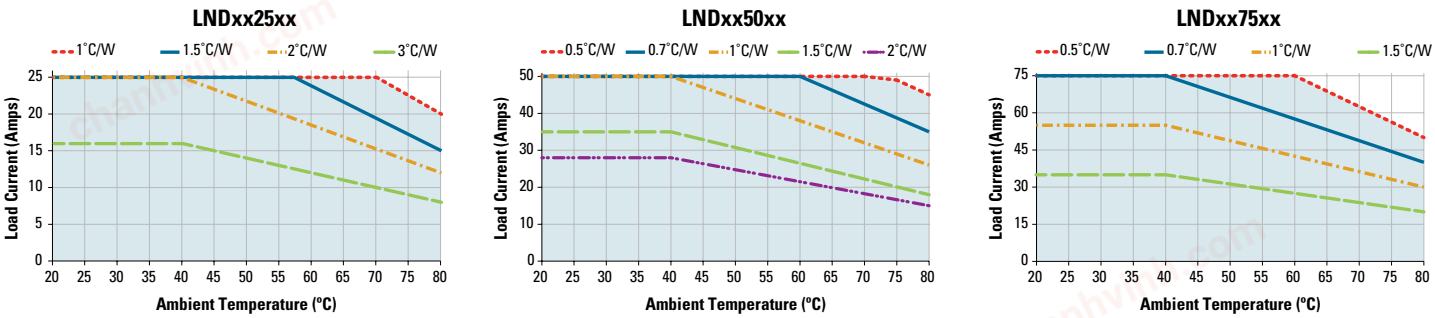

INPUT CURRENT INFORMATION(1)

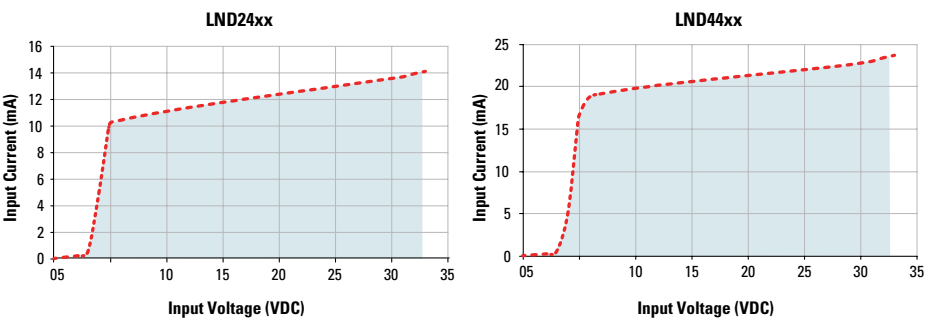

Copyright © 2019 Sensata Technologies, Inc.

chanhvinh.com

EQUIVALENT CIRCUIT BLOCK AND WIRING DIAGRAMS

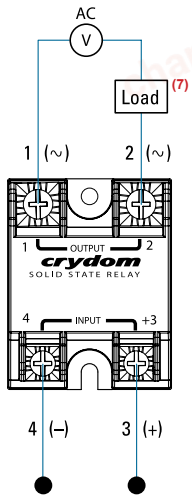

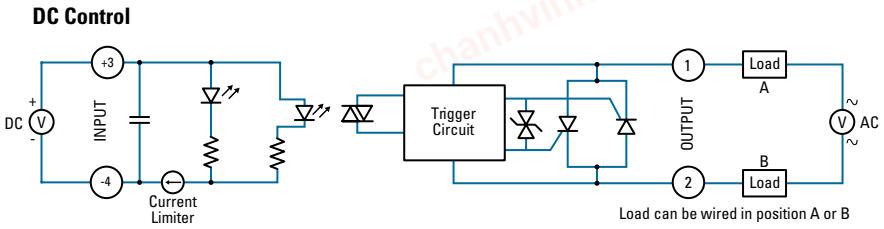

SURGE CURRENT INFORMATION

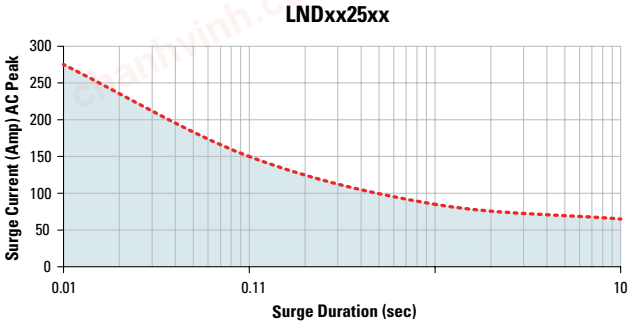

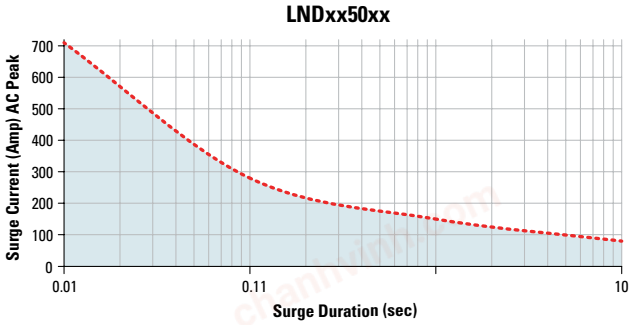

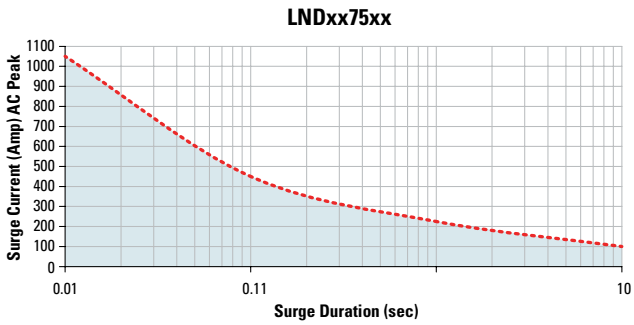

Single Pulse [6]

Copyright © 2019 Sensata Technologies, Inc.

chanhvinh.com

CONDUCTED RADIOFREQUENCY EMISSION TEST

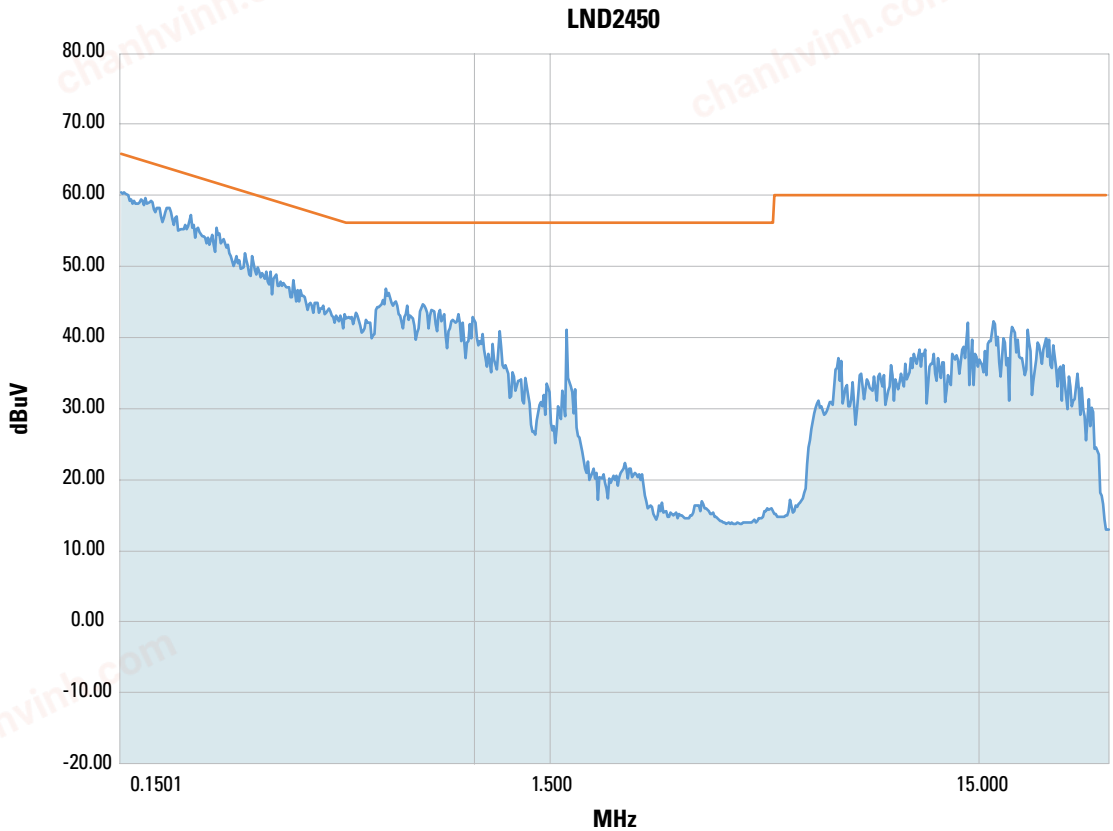

GENERAL NOTES

(1) All parameters at 25°C unless otherwise specified.
(2) Output will self trigger beyond 450-600 Vpk for LND24XX or 900-1200 Vpk for LND44XX models, not suitable for capacitive loads.
(3) Heat sinking required, see derating curves.
(4) Increase minimum voltage by 1 V for operations from -20 to -40°C.
(5) No freezing or condensation allowed.
(6) For single surge pulse Tc=25°C; Tj=125°C.
(7) Load can be wired to either SSR output terminal 1 or 2.

INSTALLATION INSTRUCTIONS

Mounting on Heat Sinks
Select adequate heat sink (see thermal derating curves).
"Be sure to use a thermal pad or thermal compound (0.006 - 0.008 in layer thickness recommended) SSR and the selected heat sink.
thickness recommended) between the SSR and the selected heat sink."
Before applying full torque tighten down both screws until they contact the baseplate. Then, tighten them to 20 lb-in (2.2 Nm).
For optimal thermal performance heat sink fins should be oriented vertically to promote natural convection airflow.

Mounting on Panels
Locate the panel section on which the SSR will be mounted. Panel mount surface must provide adequate heat sinking capability, uncoated, clean, flat (0.004 in/in recommended) and preferably aluminum.
Be sure to use a thermal pad or thermal compound (0.006 - 0.008 in layer thickness recommended) between the SSR and the panel.
SSR mounting slots have a diameter of 0.2 in (5.0 mm). Two screws are needed (not included) to mount the SSR onto panel. Choose screw length considering the mounting surface hole depth and that the SSR baseplate thickness is 0.125 in (3.2 mm).
Before applying full torque tighten down both screws until they contact the baseplate. Then, tighten them to 20 lb-in (2.2 Nm).

Copyright © 2019 Sensata Technologies, Inc.

chanhvinh.com

Recommended Torque and Wire Sizes			
Terminal	**Max. Screw Torque [lb-in (Nm)]**	**Wire Size (Solid / Stranded)**	**Wire Pull-Out Strength (lb)[N]**
Output	18-20 (2.0-2.2)	20 AWG (0.75 mm2) [minimum]	25 [111]
		2 x 10 AWG (6 mm2)	80 [355]
		2 x 8 AWG (10 mm2) [maximum]	90 [400]
Input	13-15 (1.5-1.7)	28 AWG (0.09 mm2) [minimum]	2.2 [9.8]
		2 x 12 AWG (4 mm2) [maximum]	22 [98]

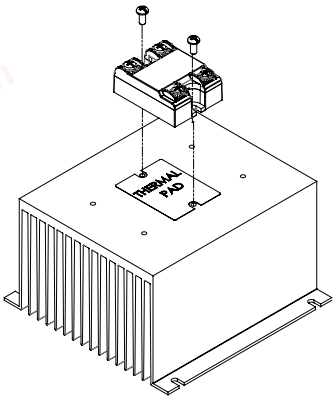

fig. 1 SSR mounted on HS053 heat sink

MECHANICAL SPECIFICATIONS

LN SERIES IP20

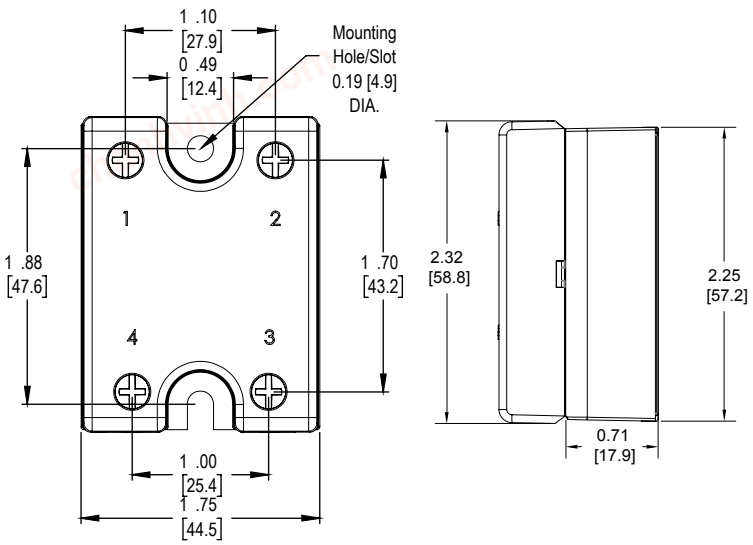

LN SERIES IP00

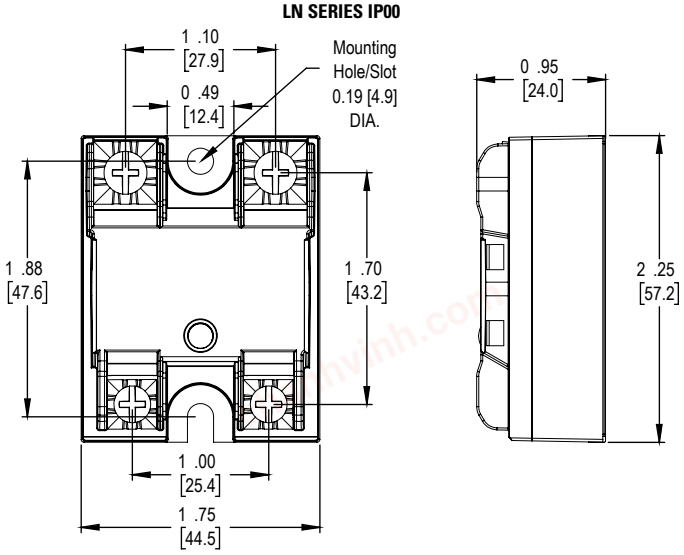

LN SERIES IP00 OPTION 'K'

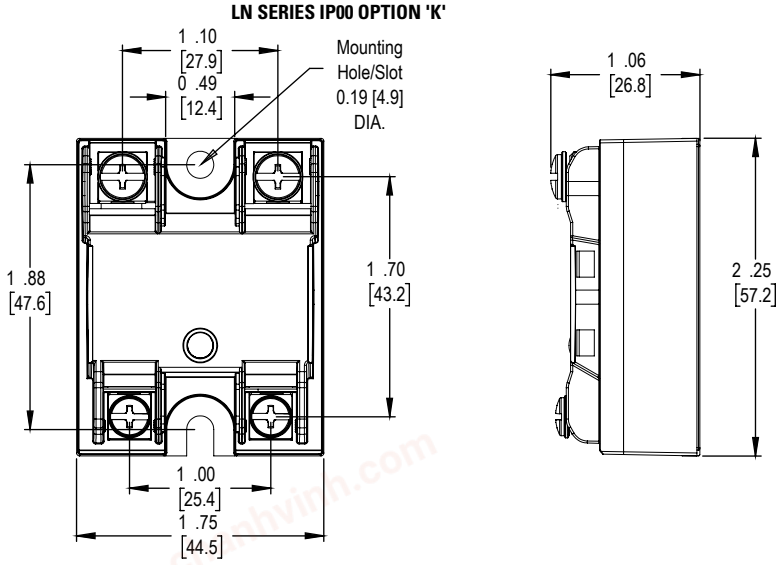

Copyright © 2019 Sensata Technologies, Inc.

chanhvinh.com

ORDERING OPTIONS

Example : LND4475CH

LN - **D** - **44** - **75** - **K** - **C** - **H**

Series

LN = Low Noise Solid State Relay

Control Voltage

D = 4.8-32 VDC

Operating Voltage

24 = 24-280 VAC
44 = 48-528 VAC

Rated Load Current

25 = 25A
50 = 50A
75 = 75A

Termination

Blank = Screw & Clamps
K = Installed standoffs with screws for PC Board mounting (IP00 only)

Protective Cover

Blank = Not included (IP00)
C = Included (IP20)

Thermal Pad

Blank = Not included
H = Included

— Required for valid part number
☐ For options only and not required for valid part number

ACCESSORIES

Recommended Accessories				
Hardware Kit	Heat Sink Part No.	Thermal Resistance [°C/W]	Thermal Pad	Lug Terminal
HK1 HK4	HS501DR HS301 / HS301DR HS251 HS201 / HS201DR HS202 / HS202DR HS172 HS151 / HS151DR HS122 / HS122DR HS103 / HS103DR HS101 HS073 HS072 HS053	5 3 2.5 2 2 1.7 1.5 1.2 1 1 0.7 0.7 0.5	HSP-1 HSP-2	TRM0 TRM6

Copyright © 2019 Sensata Technologies, Inc.

chanhvinh.com

AGENCY APPROVALS & CERTIFICATIONS

Approvals (Tested and Certified According To)	
c UL us E116950	TÜV SÜD
UL 508 and C22.2 No.14	EN 62314

Conformances						Environmental	
Vibration Resistance IEC 60068-2-6	**Shock Resistance IEC 60068-2-27**	**Electromagnetic Interference IEC 60947-4-3 (See Table 1)**	**Electromagnetic Compatibility IEC 61000-6-2 (See Table 1)**	**Resistances to heat and fire**	CE	RoHS	50
Amplitude Range: 10-55 Hz, Displacement 0.75mm	Peak Acceleration: 15g, Duration 11ms.	Conducted Disturbances CISPR 11	IEC 61000-4-2 (ESD) IEC 61000-4-4 (Burst) IEC 61000-4-5 (Surge)	IEC 60335-1, Section 30	Directive 2006/95/EC	Directive 2011/65/EU	GBT 26572-2011

Table 1. Electromagnetic Compatibility / Electromagnetic Interference

Generic Standard	Specific Standard	Test Specification Level			Performance
IEC 61000-6-2 Immunity for Industrial Environments	Electrostatic Discharge IEC 61000-4-2	8kV air discharge			Criterion A
		6kV contact discharge			Criterion A
	Fast transients (burst) IEC 61000-4-4	Output	2kV, 5kHz, 100kHz		Criterion B
		Input	1kV, 5kHz, 100kHz		Criterion B
	Surge IEC 61000-4-5	Output	1kV Line to Neutral		Criterion B
			2kV Line to Earth		Criterion B
			2kV Neutral to Earth		Criterion B
		Input	500V Line to Neutral		Criterion B
			1kV Line to Earth		Criterion B
			1kV Neutral to Earth		Criterion B
IEC 60947-4-3 Environment B Low voltage domestic, commercial and light industrial installations	Conducted Disturbances CISPR 11	Frequency, MHz	Quasi-peak, dB(uV)	Average, dB(uV)	Class B Group 1 & Group 2
		0.15 to 0.5	66 to 56	56 to 46	
		0.5 to 5	56	46	
		5 to 30	60	50	
		240VAC @40A & 440VAC @35A with Resistive Load			

Copyright © 2019 Sensata Technologies, Inc.

chanhvinh.com

WARNINGS



RISK OF MATERIAL DAMAGE AND HOT ENCLOSURE

- The product's side panels may be hot, allow the product to cool before touching
- Follow proper mounting instructions including torque values
- Do not allow liquids or foreign objects to enter this product

Failure to follow these instructions can result in serious injury, or equipment damage.



HAZARD OF ELECTRIC SHOCK, EXPLOSION OR ARC FLASH

- Disconnect all power before installing or working with this equipment
- Verify all connections and replace all covers before turning on power

Failure to follow these instructions will result in death or serious injury.

Sensata Technologies, Inc. ("Sensata") data sheets are solely intended to assist designers ("Buyers") who are developing systems that incorporate Sensata products (also referred to herein as "components"). Buyer understands and agrees that Buyer remains responsible for using its independent analysis, evaluation and judgment in designing Buyer's systems and products. Sensata data sheets have been created using standard laboratory conditions and engineering practices. Sensata has not conducted any testing other than that specifically described in the published documentation for a particular data sheet. Sensata may make corrections, enhancements, improvements and other changes to its data sheets or components without notice.
Buyers are authorized to use Sensata data sheets with the Sensata component(s) identified in each particular data sheet. HOWEVER, NO OTHER LICENSE, EXPRESS OR IMPLIED, BY ESTOPPEL OR OTHERWISE TO ANY OTHER SENSATA INTELLECTUAL PROPERTY RIGHT, AND NO LICENSE TO ANY THIRD PARTY TECHNOLOGY OR INTELLECTUAL PROPERTY RIGHT, IS GRANTED HEREIN. SENSATA DATA SHEETS ARE PROVIDED "AS IS". SENSATA MAKES NO WARRANTIES OR REPRESENTATIONS WITH REGARD TO THE DATA SHEETS OR USE OF THE DATA SHEETS, EXPRESS, IMPLIED OR STATUTORY, INCLUDING ACCURACY OR COMPLETENESS. SENSATA DISCLAIMS ANY WARRANTY OF TITLE AND ANY IMPLIED WARRANTIES OF MERCHANTABILITY, FITNESS FOR A PARTICULAR PURPOSE, QUIET ENJOYMENT, QUIET POSSESSION, AND NON-INFRINGEMENT OF ANY THIRD PARTY INTELLECTUAL PROPERTY RIGHTS WITH REGARD TO SENSATA DATA SHEETS OR USE THEREOF.
All products are sold subject to Sensata's terms and conditions of sale supplied at www.sensata.com SENSATA ASSUMES NO LIABILITY FOR APPLICATIONS ASSISTANCE OR THE DESIGN OF BUYERS' PRODUCTS. BUYER ACKNOWLEDGES AND AGREES THAT IT IS SOLELY RESPONSIBLE FOR COMPLIANCE WITH ALL LEGAL, REGULATORY AND SAFETY-RELATED REQUIREMENTS CONCERNING ITS PRODUCTS, AND ANY USE OF SENSATA COMPONENTS IN ITS APPLICATIONS, NOTWITHSTANDING ANY APPLICATIONS-RELATED INFORMATION OR SUPPORT THAT MAY BE PROVIDED BY SENSATA.
Mailing Address: Sensata Technologies, Inc., 529 Pleasant Street, Attleboro, MA 02703, USA.

CONTACT US

Americas
+1 (877) 502 5500 – Option 2
sales.crydom@sensata.com
Europe, Middle East & Africa
+44 (1202) 416170
ssr-info.eu@sensata.com
Asia Pacific
sales.isasia@list.sensata.com
China +86 (21) 2306 1500
Japan +81 (45) 277 7117
Korea +82 (31) 601 2004
India +91 (80) 67920890
Rest of Asia +886 (2) 27602006 ext 2808

Copyright © 2019 Sensata Technologies, Inc.

Rev:10/16/19_ ERN 20763 FDE-07-01 Rev. B