Grove - Capacitive Soil Moisture Sensor (Corrosion Resistant)

SKU – 101020614



The Grove - Capacitive Soil Moisture Sensor (Corrosion Resistant) is a soil moisture sensor based on capacitance changes. Compared with resistive sensors, capacitive sensors do not require direct exposure of the metal electrodes, which can significantly reduce the erosion of the electrodes.

PRODUCT DETAILS

A soil moisture sensor is one that detects the volumetric water content of the soil. The Grove - Capacitive Soil Moisture Sensor (Corrosion Resistant) is a soil moisture sensor based on **capacitance changes**. Compared with resistive sensors, capacitive sensors do not require direct exposure of the metal electrodes, which can significantly reduce the erosion of the electrodes. Hence, we call it **Corrosion Resistant**.

It is important to note that this sensor can only qualitatively test the humidity of the soil and cannot measure quantitatively. When the humidity of the soil rises, the value of the output decreases; conversely, when the humidity decreases, the output value becomes higher.

Note

We've Released the Grove Selection Guide and hope to help you find the Grove suit you best.

Feature

- Capacitive Style
- Corrosion Resistant
- Built-in Amplifier

Typical Applications

- Soil moisture detection
- Automatic watering of plants

What is Grove?

Grove makes it easier to connect, experiment, and simplify the prototyping process. No jumpers or soldering required. We have developed more than 300 Grove modules, covering a wide range of applications that can fulfill a variety of needs. Not only are these open hardware, but we also have open-source software.

Also, check our blog *Soil Moisture Sensor – How to choose and use with Arduino* to get started with a new Arduino environmental project right now!

Pin Out

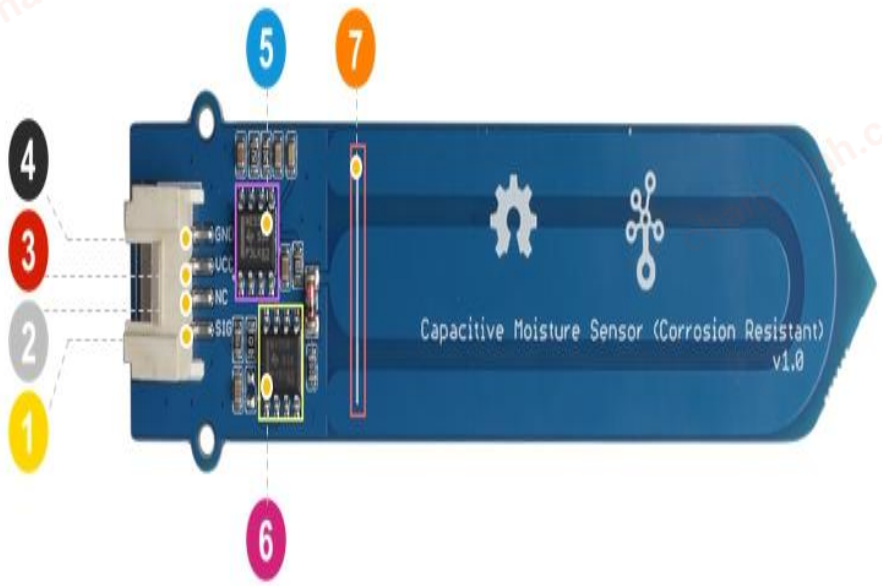

4 GND: connect this module to the system GND
3 VCC: you can use 5V or 3.3V for this module
2 NC: not connected
1 SIG: analog output
5 NE555DR IC
6 LMV358ID IC Operational Amplifier
7 Highest position line

ECCN/HTS

HSCODE	9025900090
USHSCODE	9031808070
UPC	841454121954

chanhvinh.com