chanhvinh.com

Prismatic Supercapacitor



Case SS19

See below:
Approvals and Compliances

Description
- Prismatic ultra-thin supercapacitors
- Single or double cell version
- Ultra-compact design
- High pulse power

Unique Selling Proposition
- High temperature rating
- High power density
- Low ESR with high current handling
- Very low self discharge

Applications
- Sensors
- Small mobile devices
- Small power supplies
- Mobile energy harvesting
- Uninterruptible power supply

Last order date: 31.10.2026
Last delivery date: 28.02.2027

Weblinks
pdf data sheet, html datasheet, Distributor-Stock-Check, Detailed request for product

Technical Data

Rated Voltage	2.75 / 5.5V
Capacity	120 - 2400mF
Allowable Operation Temperature	-40 °C to 85 °C
Storage Conditions	0 °C to 60 °C, max. 70% r.h.
RMS current	4 - 6A
Peak Current	30A
Mounting	PCB,SMT
Soldering Methods	Manual

Approvals and Compliances

Detailed information on product approvals, code requirements, usage instructions and detailed test conditions can be looked up in Details about Approvals

SCHURTER products are designed for use in industrial environments. They have approvals from independent testing bodies according to national and international standards. Products with specific characteristics and requirements such as required in the automotive sector according to IATF 16949, medical technology according to ISO 13485 or in the aerospace industry can be offered exclusively with customer-specific, individual agreements by SCHURTER.

Approvals

The approval mark is used by the testing authorities to certify compliance with the safety requirements placed on electronic products.

Approval Reference Type:

Approval Logo	Certificates	Certification Body	Description
	UL Approvals	UL	UR File Number: MH67371

Product standards

Product standards that are referenced

Organization	Design	Standard	Description
	Designed according to	UL 810A	Electrochemical Capacitors

PHASE-OUT

chanhvinh.com

Compliances

The product complies with following Guide Lines

Identification	Details	Initiator	Description
CE	CE declaration of conformity	SCHURTER AG	The CE marking declares that the product complies with the applicable requirements laid down in the harmonisation of Community legislation on its affixing in accordance with EU Regulation 765/2008.
UKCA	UKCA declaration of conformity	SCHURTER AG	The UKCA marking declares that the product complies with the applicable requirements laid down in the British Amendment of Regulation (EC) 765/2008.
RoHS	RoHS	SCHURTER AG	Directive RoHS 2011/65/EU, Amendment (EU) 2015/863
50	China RoHS	SCHURTER AG	The law SJ / T 11363-2006 (China RoHS) has been in force since 1 March 2007. It is similar to the EU directive RoHS.
REACH	REACH	SCHURTER AG	On 1 June 2007, Regulation (EC) No 1907/2006 on the Registration, Evaluation, Authorization and Restriction of Chemicals 1 (abbreviated as "REACH") entered into force.

Dimension [mm]

Case AS12

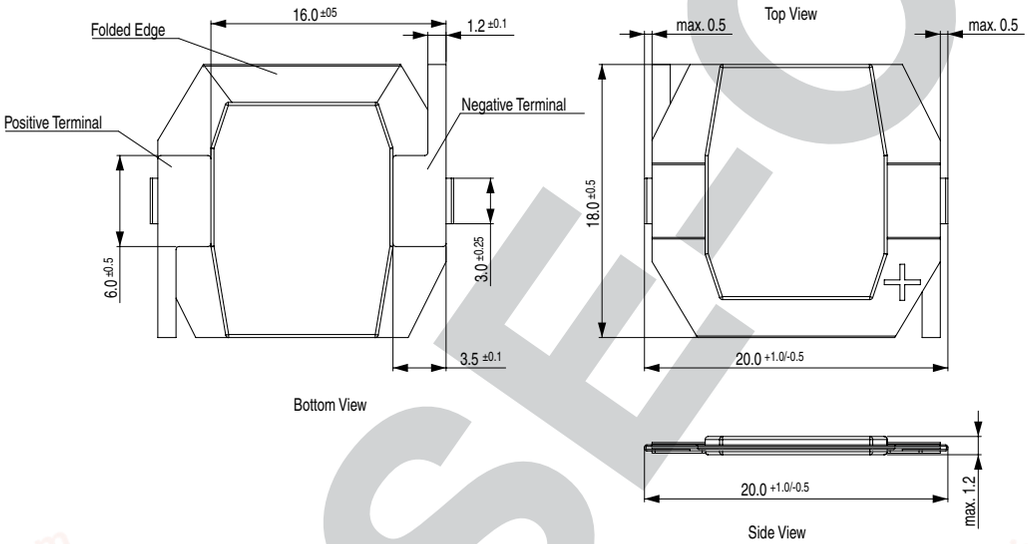

Case WS10

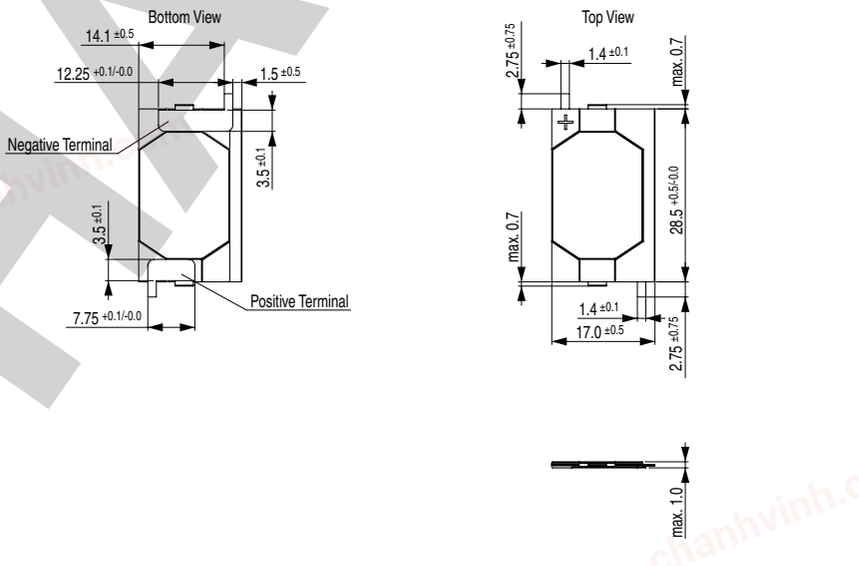

PHASE OUT

chanhvinh.com

Case SS10

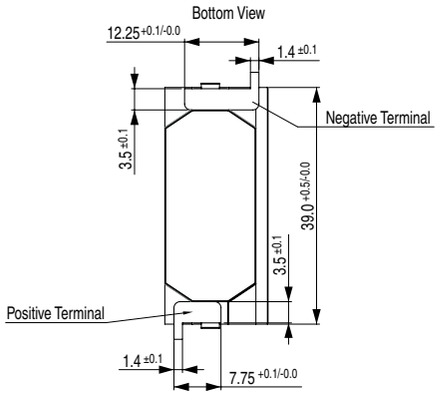

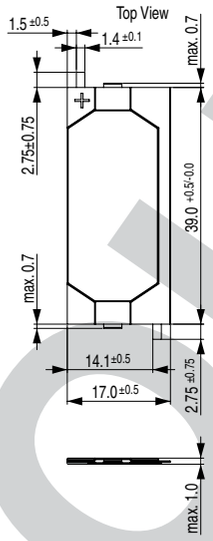

Case AS17

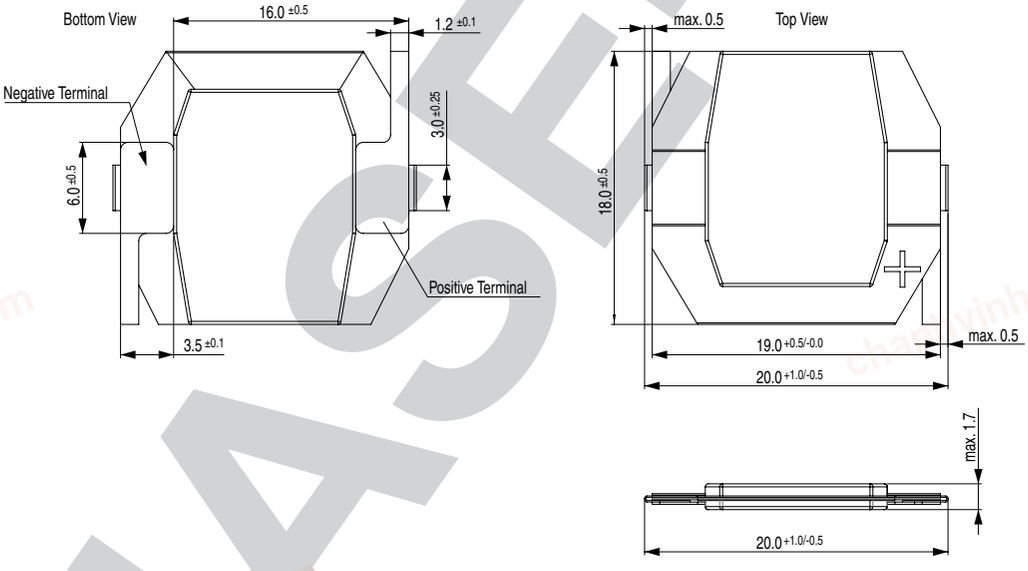

PHASE-OUT

chanhvinh.com

Case WS13

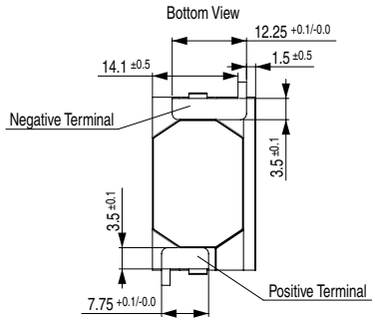

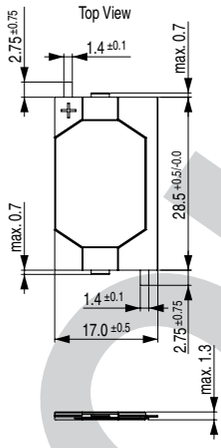

Case WS17

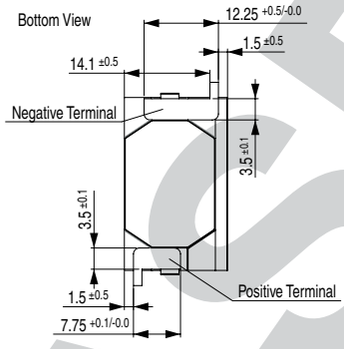

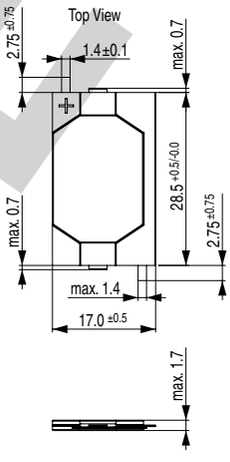

PHASE-OUT

chanhvinh.com

Case SS13

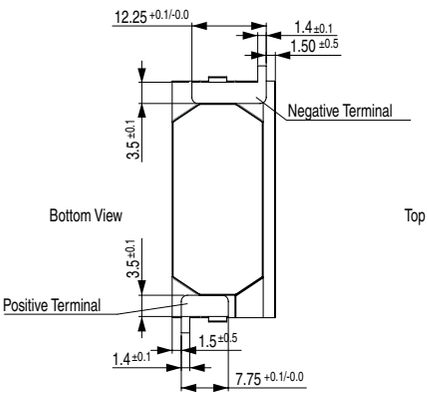

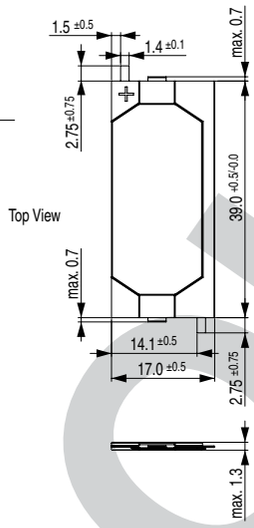

Case SS17

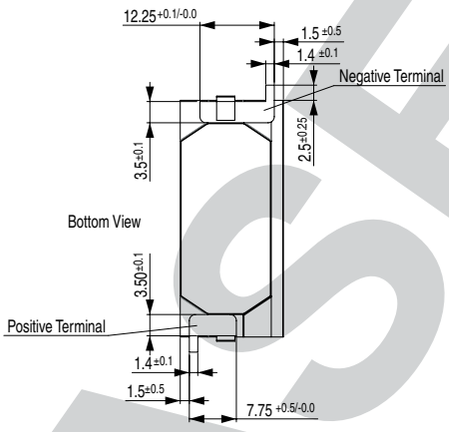

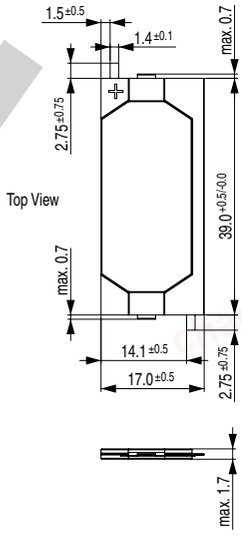

PHASE-OUT

chanhvinh.com

Case SS19

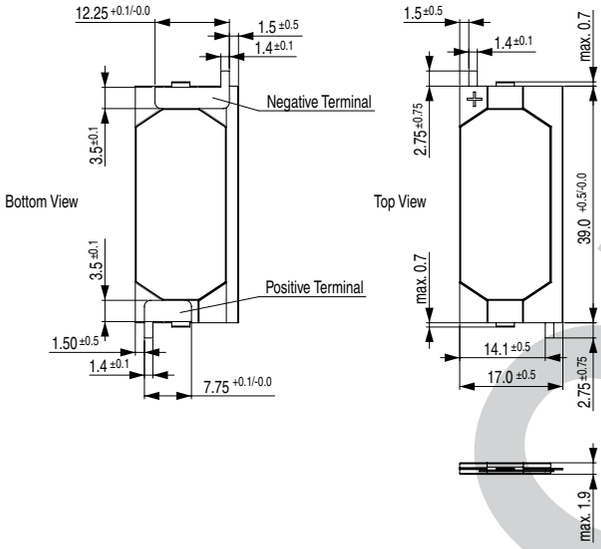

Case AS25

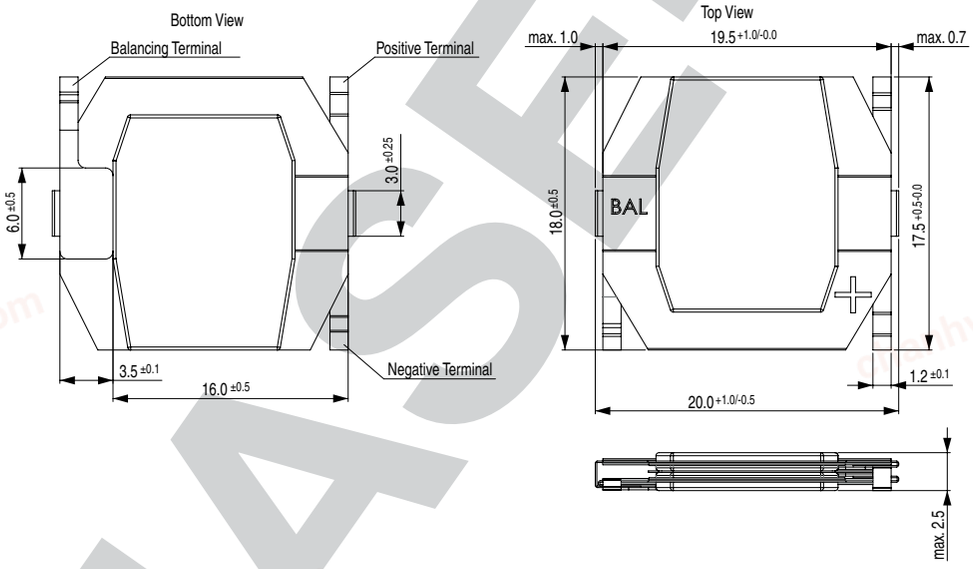

PHASE-OUT

chanhvinh.com

Case WS21

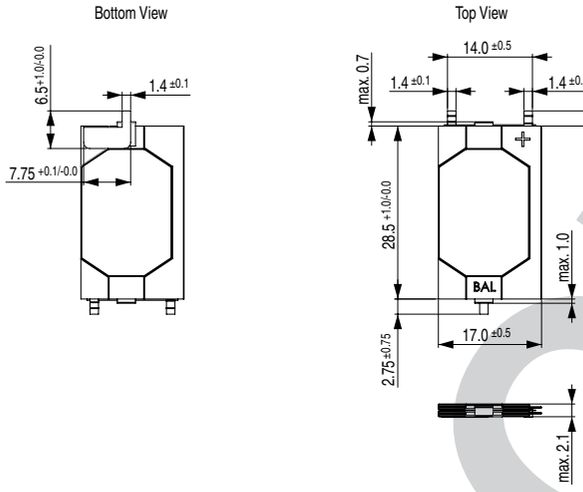

Case SS21

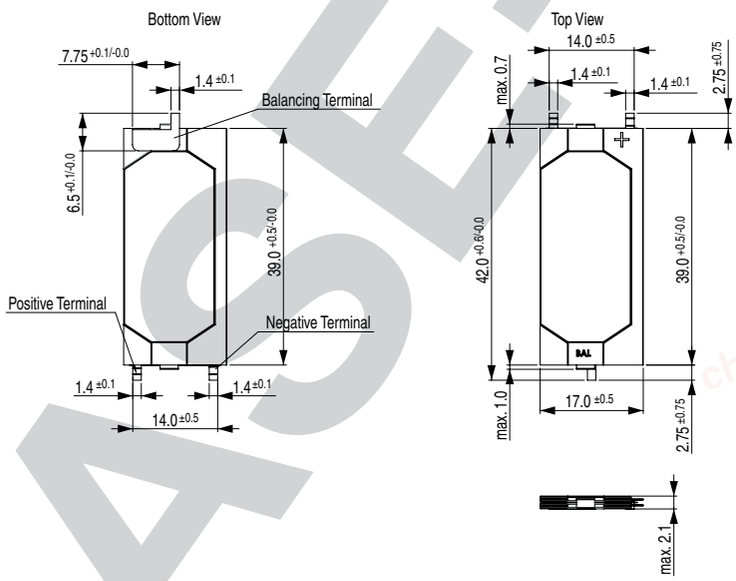

PHASE-OUT

chanhvinh.com

Case AS35

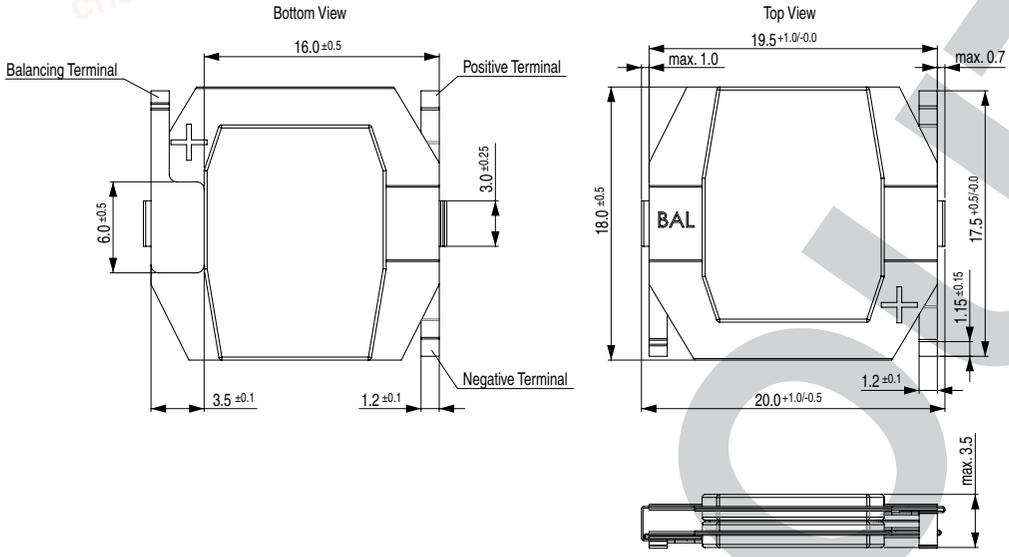

Case WS27

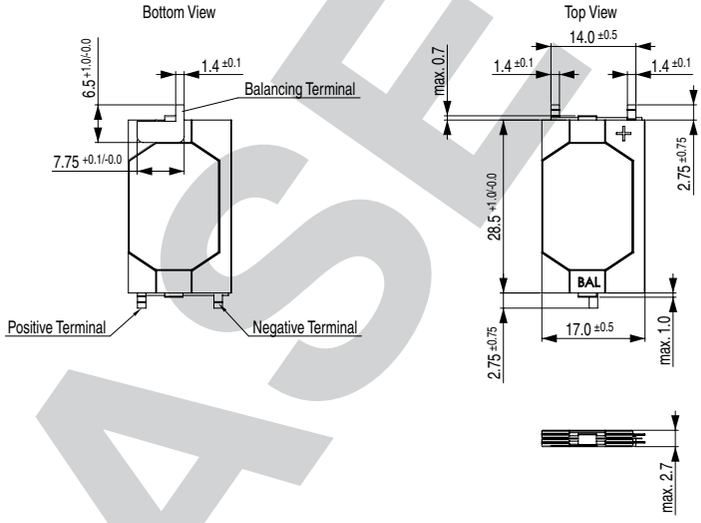

PHASE-OUT

chanhvinh.com

Case WS34

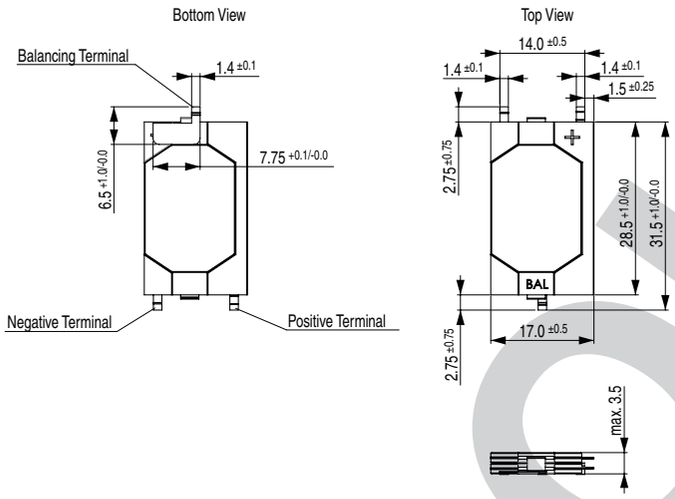

Case SS27

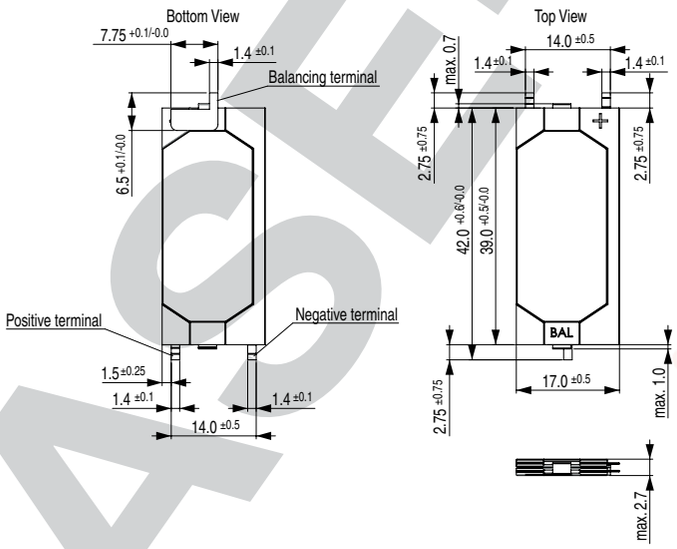

PHASE-OUT

chanhvinh.com

Case SS34

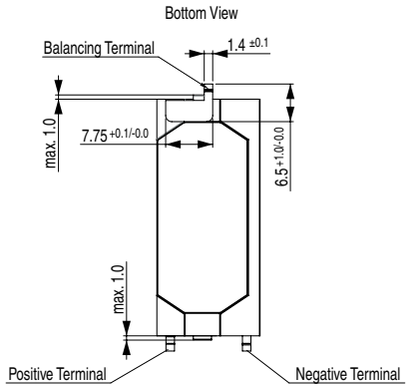

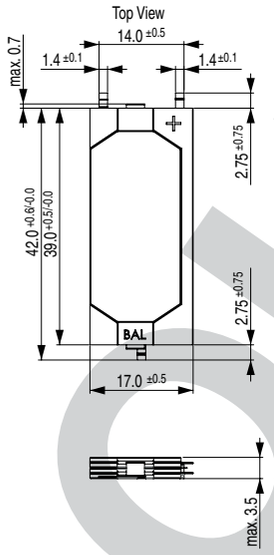

Case SS39

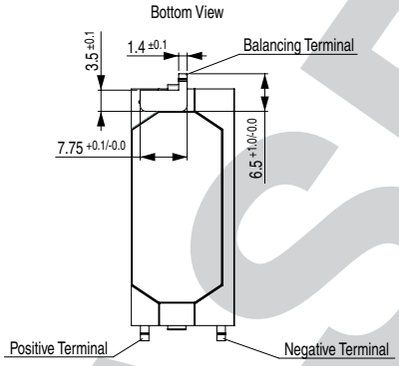

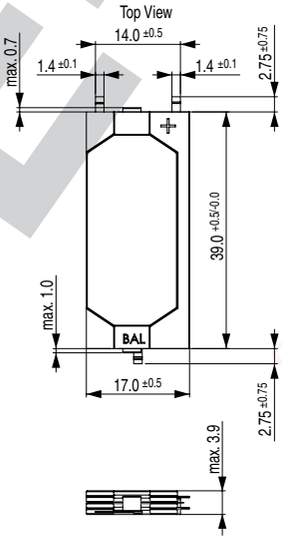

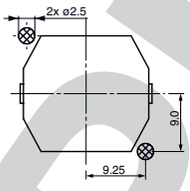

Soldering pads to Case AS10, AS17

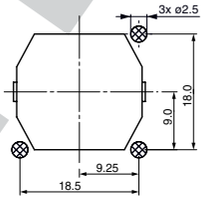

Soldering pads to Case AS12, AS17

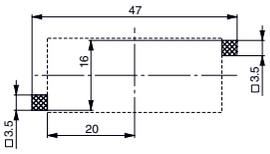

Soldering pads to Case SS10, SS13, SS17, SS19

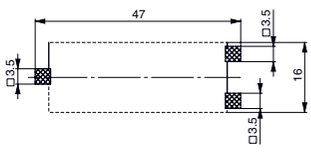

Soldering pads to Case SS21, SS27, SS34, SS39

PHASE-OUT

chanhvinh.com

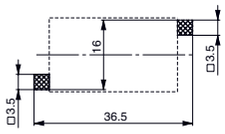

Soldering pads to Case WS10,WS13, WS17

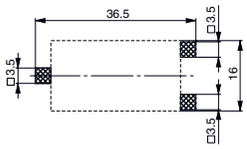

Soldering pads to Case WS21,WS27, WS34

Variants

Cell Type	Rated Voltage [V]	Capacity (DC, 23°C, ±20%) [mF]	ESR max. (AC@1kHz, 23°C) [mΩ]	Leakage Current typ. (120h, U_R, 23°C) [µA]	Leakage Current max. (120h, U_R,	RMS current (23°C) [A]	Peak Current (23°C) [A]	Housing	Order Number
Low ESR Single Cell	2.75	240	60	1	2	4	30	AS12	3-153-433
Low ESR Single Cell	2.75	300	50	1	2	4	30	WS10	3-153-434
Low ESR Single Cell	2.75	500	30	1	2	6	30	SS10	3-153-435
Low ESR Single Cell	2.75	760	50	1	2	3	30	WS13	3-153-436
Low ESR Single Cell	2.75	800	65	1	2	3	30	AS17	3-153-437
Low ESR Single Cell	2.75	1000	40	1	2	6	30	WS17	3-153-438
Low ESR Single Cell	2.75	1300	30	1	2	6	30	SS13	3-153-439
Low ESR Single Cell	2.75	1800	25	1	2	5	30	SS17	3-153-440
Low ESR Single Cell	2.75	2400	25	3	5	6	30	SS19	3-153-441
Low ESR Dual Cell	5.5	120	120	1	2	4	30	AS25	3-153-442
Low ESR Dual Cell	5.5	150	100	1	2	4	30	WS21	3-153-443
Low ESR Dual Cell	5.5	250	55	1	2	6	30	SS21	3-153-444
Low ESR Dual Cell	5.5	380	100	1	2	3	30	WS27	3-153-445
Low ESR Dual Cell	5.5	400	130	1	2	4	30	AS35	3-153-446
Low ESR Dual Cell	5.5	500	75	1	2	6	30	WS34	3-153-447
Low ESR Dual Cell	5.5	650	55	1	2	6	30	SS27	3-153-448
Low ESR Dual Cell	5.5	900	45	1	2	5	30	SS34	3-153-449
Low ESR Dual Cell	5.5	1200	45	3	5	6	30	SS39	3-153-450

Availability for all products can be searched real-time: https://www.schurter.com/en/info-center/support-tools/stock-check-distributors

Packaging Unit

100 Pcs

PHASE OUT

25.08.2026

The specifications, descriptions and illustrations indicated in this document are based on current information. All content is subject to modifications and amendments. Information furnished is believed to be accurate and reliable. However, users should independently evaluate the suitability and test each product selected for their own applications.