chanhvinh.com

Subminiature Fuse, 8.5 mm, Time-Lag T, 250 VAC, 100 A



Subminiature fuse 8.5 mm, time-lag T, 250 VAC
Short terminal
PCB



Subminiature fuse time-lag T from front side
Terminal long

IEC 60127-3 · 250 VAC · Time-Lag T

See below:
Approvals and Compliances

Description

- Directly solderable on printed circuit boards
- High breaking capacity

Applications

- Primary Protection on PCB
- Power Supply Adapter for e.g. laptops
- SMPS (Switching Mode Power Supply) for TV's and DVD's

References

Last order date: 30.04.2026
Last delivery date: 31.07.2026

Weblinks

pdf data sheet, html datasheet, General Product Information, Distributor-Stock-Check, Detailed request for product

Technical Data

Rated Voltage	250 VAC
Rated current	0.8 - 10 A
Breaking Capacity	100 A
Characteristic	Time-Lag T
Mounting	PCB,THT
Admissible Ambient Temp.	-40 °C to 85 °C
Climatic Category	40/085/21 acc. to IEC 60068-1
Material: Housing	Thermoplastic, UL 94V-0
Material: Terminals	Tin-Plated Copper
Unit Weight	0.78 g
Storage Conditions	0 °C to 40 °C, max. 70% r.h.
Product Marking	, Type, Rated current, Rated Voltage, Characteristic, Certification marks

Soldering Methods	Wave Soldering Profile
Solderability	235 °C / 2 sec acc. to IEC 60068-2-20, Test Ta
Resistance to Soldering Heat	260 °C / 10 sec acc. to IEC 60068-2-20, Test Tb
Case Resistance	acc. to EIA/IS-722, Test 4.7 >100 MΩ (between leeds and body)
Flammability	UL 94V-0 (acc. to EIA/IS-722, Test 4.12)
Resistance to Vibration	acc. to IEC 60068-2-6, test Fc
Moisture Sensitivity Level	MIL-STD-202, Method 106 (50 cycles in a temp./mister chamber)
Operational Time	1000h @ 0.60 x In @ 70°C (acc. to EIA/IS-722, Test 4.4.1)
Load Humidity Test	MIL-STD-202, Method 103 0.1 x In @ 0.85 r.H. @ 85°C
Mechanical Shock	MIL-STD-202, Method 213 Condition A
Resistance to Solvents	MIL-STD-202, Method 215
Terminal Strength	Tensile load min. 9 N (acc. to EIA/IS-722, Test 4.5.5)

Approvals and Compliances

Detailed information on product approvals, code requirements, usage instructions and detailed test conditions can be looked up in Details about Approvals

SCHURTER products are designed for use in industrial environments. They have approvals from independent testing bodies according to national and international standards. Products with specific characteristics and requirements such as required in the automotive sector according to IATF 16949, medical technology according to ISO 13485 or in the aerospace industry can be offered exclusively with customer-specific, individual agreements by SCHURTER.

PHASE-OUT

chanhvinh.com

Approvals

The approval mark is used by the testing authorities to certify compliance with the safety requirements placed on electronic products.
Approval Reference Type: MXT 250

Approval Logo	Certificates	Certification Body	Description
	VDE Approvals	VDE	VDE Certificate Number: 40008838
	VDE Approvals	VDE	VDE Certificate Number: 40024477
	UL Approvals	UL	UL File Number: E41599
	UL Approvals	UL	UR File Number: E41599
	CCC Approvals	CCC	CCC Certificate Number: 2020970207000094
	KTL Approvals	KTL	Korea Testing Laboratory
	METI Approvals	METI	Japan Electrical Safety and Environment technology Laboratories

Product standards

Product standards that are referenced

Organization	Design	Standard	Description
	Designed according to	IEC 60127-3/4	Miniature fuses - Part 3: Miniature fuse-links
	Designed according to	UL 248-14	Low voltage fuses - Part 14: Supplemental fuses
	Designed according to	CSA22.2 No. 248.14	Low-Voltage Fuses - Part 14: Supplemental Fuses

Application standards

Application standards where the product can be used

Organization	Design	Standard	Description
	Suitable for applications acc.	IEC/UL 62368-1	Audio/video, information and communication technology equipment - Part 1: Safety requirements

Compliances

The product complies with following Guide Lines

Identification	Details	Initiator	Description
	CE declaration of conformity	SCHURTER AG	The CE marking declares that the product complies with the applicable requirements laid down in the harmonisation of Community legislation on its affixing in accordance with EU Regulation 765/2008.
	UKCA declaration of conformity	SCHURTER AG	The UKCA marking declares that the product complies with the applicable requirements laid down in the British Amendment of Regulation (EC) 765/2008.
	RoHS	SCHURTER AG	Directive RoHS 2011/65/EU, Amendment (EU) 2015/863
	China RoHS	SCHURTER AG	The law SJ / T 11363-2006 (China RoHS) has been in force since 1 March 2007. It is similar to the EU directive RoHS.
	REACH	SCHURTER AG	On 1 June 2007, Regulation (EC) No 1907/2006 on the Registration, Evaluation, Authorization and Restriction of Chemicals 1 (abbreviated as "REACH") entered into force.

PHASE-OUT

chanhvinh.com

Dimension [mm]

8.5 mm

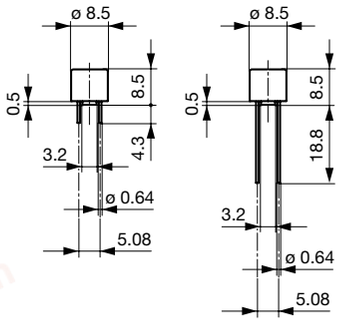

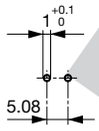

Drilling diagram

Pre-Arcing Time

Rated Current In	1.0 x In min.	1.5 x In min.	2.0 x In max.	2.1 x In max.	2.75 x In min.	2.75 x In max.	4.0 x In min.	4.0 x In max.	10.0 x In min.	10.0 x In max.
0.8 A - 6.3 A	-	60 min	-	120 s	400 ms	10 s	150 ms	3 s	20 ms	150 ms
8 A - 10 A	4 h	-	60 s	-	-	-	-	-	-	-

Time-Current-Curves

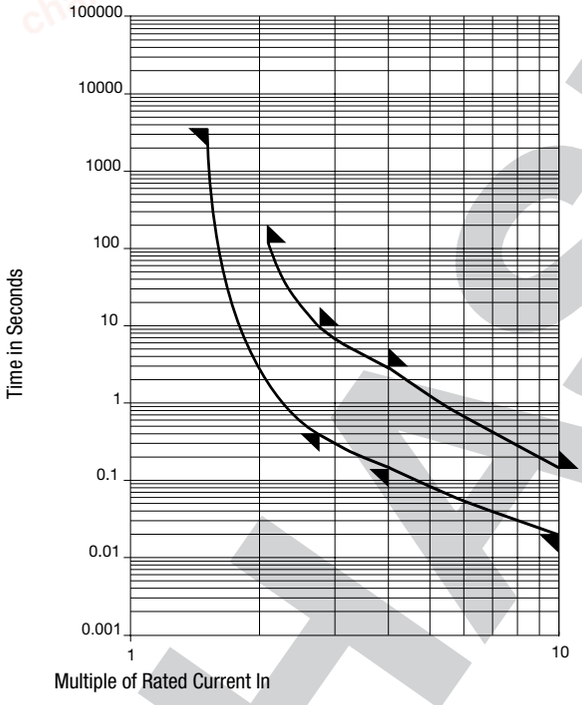

Variants

Rated Current [A]	Rated Voltage [VAC]	Breaking Capacity	Voltage Drop 1.0 I_n max. [mV]	Voltage Drop 1.0 I_n typ. [mV]	Power Dissipation 1.5 I_n max. [mW]	Melting I^2t 10.0 I_n typ. [A^2s]	S	L	T	Order Number
0.8	250	1)	160	128	430	1.5	●	●	●	0034.6914
1	250	1)	140	130	500	4.4	●	●	●	0034.6915
1.25	250	1)	130	120	600	6.3	●	●	●	0034.6916
1.6	250	1)	120	110	730	10	●	●	●	0034.6917
2	250	1)	100	85	870	16	●	●	●	0034.6918

PHASE-OUT

chanhvinh.com

Rated Current [A]	Rated Voltage [VAC]	Breaking Capacity	Voltage Drop 1.0 I_n max. [mV]	Voltage Drop 1.0 I_n typ. [mV]	Power Dissipation 1.5 I_n max. [mW]	Melting I^2t 10.0 I_n typ. [A^2s]	S	L	T	Order Number
2.5	250	1)	100	85	1000	32	●	●		0034.6919
3.15	250	1)	100	75	1200	57	●	●		0034.6920
4	250	1)	100	75	1400	77	●	●		0034.6921
5	250	1)	-	70	-	155	●	●		0034.6922
6.3	250	1)	-	60	-	262	●	●		0034.6923
8	250	2)	-	62	-	397	●	●		0034.6924
10	250	2)	-	62	-	440	●	●		0034.6925
0.8	250	1)	160	128	430	1.5	●		●	0034.6944
1	250	1)	140	130	500	4.4	●		●	0034.6945
1.25	250	1)	130	120	600	6.3	●		●	0034.6946
1.6	250	1)	120	110	730	10	●		●	0034.6947
2	250	1)	100	85	870	16	●		●	0034.6948
2.5	250	1)	100	85	1000	32	●		●	0034.6949
3.15	250	1)	100	75	1200	57	●		●	0034.6950
4	250	1)	100	75	1400	77	●		●	0034.6951
5	250	1)	-	70	-	155	●		●	0034.6952
6.3	250	1)	-	60	-	262	●		●	0034.6953
8	250	2)	-	62	-	397	●		●	0034.6954
10	250	2)	-	62	-	440	●		●	0034.6955
0.8	250	1)	160	128	430	1.5	●		●	0034.6974
1	250	1)	140	130	500	4.4	●		●	0034.6975
1.25	250	1)	130	120	600	6.3	●		●	0034.6976
1.6	250	1)	120	110	730	10	●		●	0034.6977
2	250	1)	100	85	870	16	●		●	0034.6978
2.5	250	1)	100	85	1000	32	●		●	0034.6979
3.15	250	1)	100	75	1200	57	●		●	0034.6980
4	250	1)	100	75	1400	77	●		●	0034.6981
5	250	1)	-	70	-	155			●	0034.6982
6.3	250	1)	-	60	-	262			●	0034.6983
8	250	2)	-	62	-	397			●	0034.6984
10	250	2)	-	62	-	440			●	0034.6985

Availability for all products can be searched real-time: https://www.schurter.com/en/info-center/support-tools/stock-check-distributors

1) 100 A @ 250 VAC, cos φ = 1.0

2) 100 A @ 250 VAC, cos φ = 0.95 - 1.0

Packaging Unit
acc. IEC 60286-2

S =	100 pcs in ESD-plastic bag
L =	100 St. (Bulk)
T =	750 pcs. in tape [P = P0: 12.7; P1: 3.81; H1: 26.45] on reel [A: 360; W3: 40; W4: 52; C: 30.5]

21.07.2026

The specifications, descriptions and illustrations indicated in this document are based on current information. All content is subject to modifications and amendments. Information furnished is believed to be accurate and reliable. However, users should independently evaluate the suitability and test each product selected for their own applications.