chanhvinh.com

OG (Holder) 6.3x32

Fuseholder Open Design, 6.3 x 32 mm, THT



2.5W / 10A @Tu 23°C · 500 VAC · 16 A (UL)

See below:
Approvals and Compliances

Description

- Through hole mounting

Weblinks

pdf data sheet, html datasheet, General Product Information, Distributor-Stock-Check, Detailed request for product, Microsite

Technical Data

Fuse-Link	6.3 x 32 mm
Mounting	PCB
Attachment	Screw/rivet/THT
Terminal	Solder THT
Rated Voltage	500 VAC (UL)
Rated current	16 A (UL)
Rated Power Acceptance IEC	2.5W / 10A @Tu 23°C
Admissible Ambient Air Temp.	-40 °C to 85 °C
Climatic Category	40/085/21 acc. to IEC 60068-1
Material: Terminals	Copper alloy, tin-plated
Unit Weight	7.23 g
Storage Conditions	0 °C to 60 °C, max. 70% r.h.
Product Marking	Rated Voltage, Rated current, Certification marks

Soldering Methods	Wave Soldering Profile
Solderability	245 °C / 3 sec acc. to IEC 60068-2-20, Test Ta, method 1
Resistance to Soldering Heat	260 °C / 10 sec acc. to IEC 60068-2-20, Test Tb, method 1A
Solderability	245 °C / 3 sec acc. to IEC 60068-2-20, Test Ta, method 1
Contact Resistance	≤ 10 mΩ at 100 mA acc. to IEC 60127-6
Dielectric Strength	> 3 kV between life parts (50 Hz: 1 min)
Impulse Withstand Voltage	> 4 kV between life parts
Insulation Resistance	> 10 MΩ between life parts (500 VDC: 1 min)

Approvals and Compliances

Detailed information on product approvals, code requirements, usage instructions and detailed test conditions can be looked up in Details about Approvals

SCHURTER products are designed for use in industrial environments. They have approvals from independent testing bodies according to national and international standards. Products with specific characteristics and requirements such as required in the automotive sector according to IATF 16949, medical technology according to ISO 13485 or in the aerospace industry can be offered exclusively with customer-specific, individual agreements by SCHURTER.

Approvals

The approval mark is used by the testing authorities to certify compliance with the safety requirements placed on electronic products.

Approval Reference Type: OG (Holder) 6.3x32

Approval Logo	Certificates	Certification Body	Description
c UL us	UL Approvals	UL	UR File Number: E39328

Product standards

Product standards that are referenced

Organization	Design	Standard	Description
UL	Designed according to	UL 4248-1	Industrial Control Equipment
CSA Group	Designed according to	CSA C22.2 no. 4248.1	Industrial Control Equipment

chanhvinh.com

OG (Holder) 6.3x32

Application standards

Application standards where the product can be used

Organization	Design	Standard	Description
IEC	Designed for applications acc.	IEC/UL 62368-1	Audio/video, information and communication technology equipment - Part 1: Safety requirements

Compliances

The product complies with following Guide Lines

Identification	Details	Initiator	Description
CE	CE declaration of conformity	SCHURTER AG	The CE marking declares that the product complies with the applicable requirements laid down in the harmonisation of Community legislation on its affixing in accordance with EU Regulation 765/2008.
UKCA	UKCA declaration of conformity	SCHURTER AG	The UKCA marking declares that the product complies with the applicable requirements laid down in the British Amendment of Regulation (EC) 765/2008.
RoHS	RoHS	SCHURTER AG	Directive RoHS 2011/65/EU, Amendment (EU) 2015/863
China RoHS	China RoHS	SCHURTER AG	The law SJ / T 11363-2006 (China RoHS) has been in force since 1 March 2007. It is similar to the EU directive RoHS.
REACH	REACH	SCHURTER AG	On 1 June 2007, Regulation (EC) No 1907/2006 on the Registration, Evaluation, Authorization and Restriction of Chemicals 1 (abbreviated as "REACH") entered into force.

Dimension [mm]

41 mm

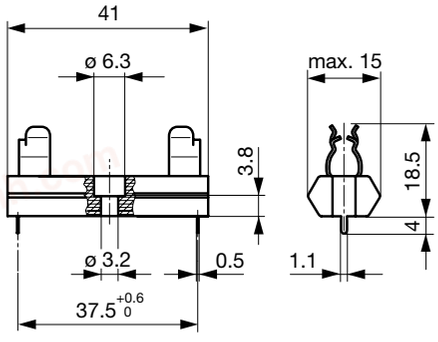

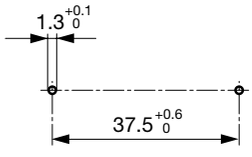

Drilling diagram

Derating Curves

acc. to IEC

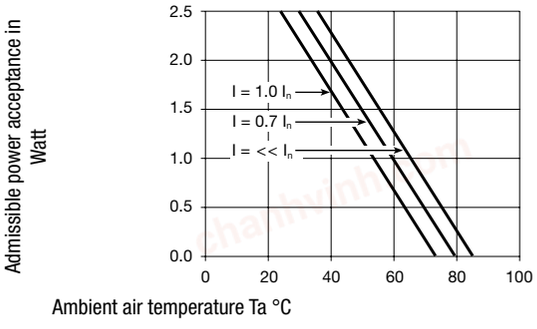

All Variants

Holder	Order Number
●	0031.8002

Most Popular.

Availability for all products can be searched real-time:https://www.schurter.com/en/Stock-Check/Stock-Check-SCHURTER

chanhvinh.com

OG (Holder) 6.3x32

Packaging Unit	Bulk (100 pcs.)

chanhvinh.com

The specifications, descriptions and illustrations indicated in this document are based on current information. All content is subject to modifications and amendments. Information furnished is believed to be accurate and reliable. However, users should independently evaluate the suitability and test each product selected for their own applications.