chanhvinh.com

Product data sheet
Characteristics

ZB5AA8
grey flush pushbutton head Ø22 spring return unmarked



Main

Range of product	Harmony XB5
Product or component type	Head for non-illuminated push-button
Device short name	ZB5
Bezel material	Dark grey plastic
Mounting diameter	22 mm
Head type	Standard
Sale per indivisible quantity	1
Shape of signaling unit head	Round
Type of operator	spring return
Operator profile	Grey flush, unmarked

Complementary

CAD overall width	29 mm
CAD overall height	29 mm
CAD overall depth	28 mm
Net weight	0.018 kg
Mechanical durability	10000000 cycles
Station name	XALD 1...5 cut-outs XALK 2...5 cut-outs
Electrical composition code	C1 for <9 contacts using single blocks in front mounting C2 for <9 contacts using single and double blocks in front mounting C11 for <3 contacts using single blocks in front mounting C15 for <1 contacts using single blocks in front mounting SF1 for <3 contacts using single blocks in front mounting SR1 for <3 contacts using single blocks in rear mounting
Device presentation	Basic element

Disclaimer: This documentation is not intended as a substitute for and is not to be used for determining suitability or reliability of these products for specific user applications

chanhvinh.com

Environment

Protective treatment	TH
Ambient air temperature for storage	-40…70 °C
Ambient air temperature for operation	-40…70 °C
Overvoltage category	Class II conforming to IEC 60536
IP degree of protection	IP66 conforming to IEC 60529 IP67 IP69 IP69K
NEMA degree of protection	NEMA 13 NEMA 4X
Resistance to high pressure washer	7000000 Pa at 55 °C, distance : 0.1 m
IK degree of protection	IK03 conforming to IEC 50102
Standards	CSA C22.2 No 14 EN/IEC 60947-5-4 EN/IEC 60947-1 UL 508 EN/IEC 60947-5-1 JIS C8201-5-1 JIS C8201-1
Product certifications	GL BV CSA DNV RINA UL listed LROS (Lloyds register of shipping)
Shock resistance	30 gn (duration = 18 ms) for half sine wave acceleration conforming to IEC 60068-2-27 50 gn (duration = 11 ms) for half sine wave acceleration conforming to IEC 60068-2-27
Vibration resistance	5 gn (f= 2…500 Hz) conforming to IEC 60068-2-6

Packing Units

Package 1 Weight	16 g
Package 2 Weight	84 g
Package 3 Weight	5.594 kg

Offer Sustainability

Sustainable offer status	Green Premium product
REACh Regulation	REACh Declaration
REACh free of SVHC	Yes
EU RoHS Directive	Pro-active compliance (Product out of EU RoHS legal scope) EU RoHS Declaration
Toxic heavy metal free	Yes
Mercury free	Yes
RoHS exemption information	Yes
China RoHS Regulation	China RoHS declaration
Environmental Disclosure	Product Environmental Profile
Circularity Profile	End of Life Information

Contractual warranty

Warranty	18 months

chanhvinh.com

Product data sheet
Dimensions Drawings

ZB5AA8

Dimensions

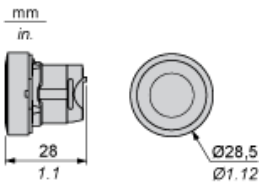

chanhvinh.com

Product data sheet
Mounting and Clearance

ZB5AA8

Panel Cut-out for Pushbuttons, Switches and Pilot Lights (Finished Holes, Ready for Installation)

Connection by Screw Clamp Terminals or Plug-in Connectors or on Printed Circuit Board

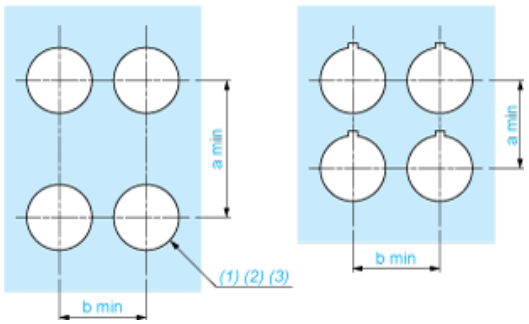

(1) Diameter on finished panel or support
(2) For selector switches and Emergency stop buttons, use of an anti-rotation plate type ZB5AZ902 is recommended.
(3) Ø22.5 mm recommended (Ø22.3 $_{0}^{+0.4}$) / Ø0.89 in. recommended (Ø0.88 in. $_{0}^{+0.016}$)

Connections	a in mm	a in in.	b in mm	b in in.
By screw clamp terminals or plug-in connector	40	1.57	30	1.18
By Faston connectors	45	1.77	32	1.26
On printed circuit board	30	1.18	30	1.18

Detail of Lug Recess

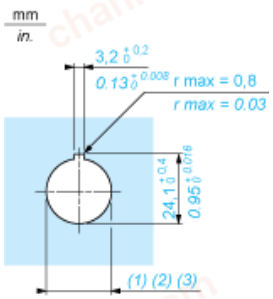

(1) Diameter on finished panel or support
(2) For selector switches and Emergency stop buttons, use of an anti-rotation plate type ZB5AZ902 is recommended.
(3) Ø22.5 mm recommended (Ø22.3 $_{0}^{+0.4}$) / Ø0.89 in. recommended (Ø0.88 in. $_{0}^{+0.016}$)

Life Is On Schneider Electric

chanhvinh.com

Product data sheet
Mounting and Clearance

ZB5AA8

Pushbuttons, Switches and Pilot Lights for Printed Circuit Board Connection

Panel Cut-outs (Viewed from Installer's Side)

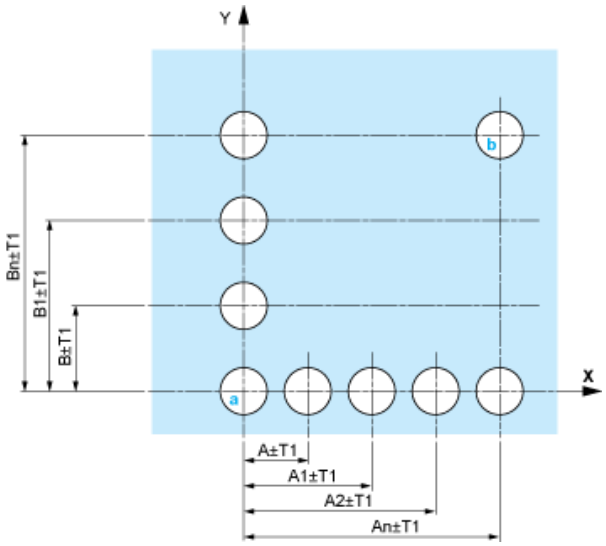

A: 30 mm min. / 1.18 in. min.
B: 40 mm min. / 1.57 in. min.

Printed Circuit Board Cut-outs (Viewed from Electrical Block Side)

Dimensions in mm

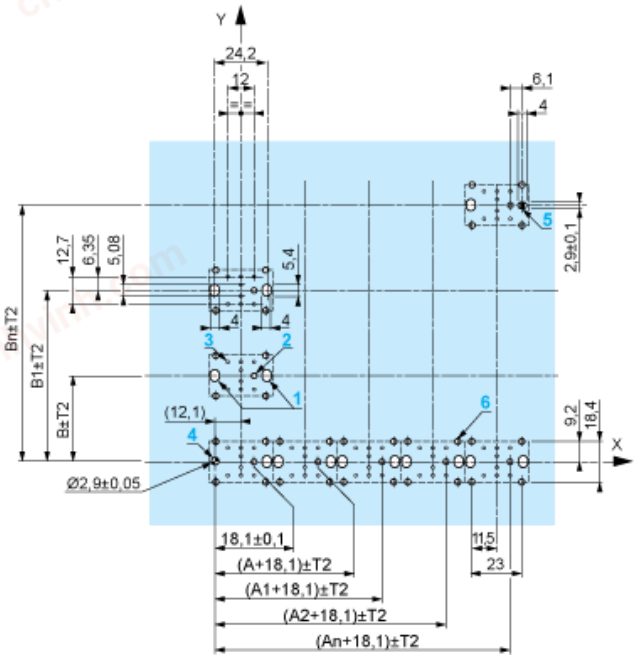

A: 30 mm min.
B: 40 mm min.

chanhvinh.com

Dimensions in in.

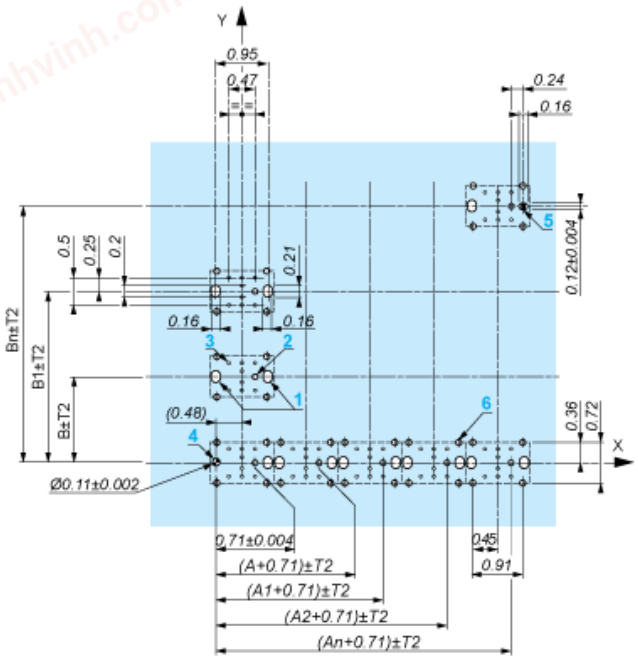

A: 1.18 in. min.
B: 1.57 in. min.

General Tolerances of the Panel and Printed Circuit Board

The cumulative tolerance must not exceed 0.3 mm / 0.012 in.: T1 + T2 = 0.3 mm max.

Installation Precautions

- Minimum thickness of circuit board: 1.6 mm / 0.06 in.
- Cut-out diameter: 22.4 mm ± 0.1 / 0.88 in. ± 0.004
- Orientation of body/fixing collar ZB5AZ009: ± 2°30' (excluding cut-outs marked a and b).
- Tightening torque of screws ZBZ006: 0.6 N.m (5.3 lbf.in) max.
- Allow for one ZB5AZ079 fixing collar/pillar and its fixing screws:
  - every 90 mm / 3.54 in. horizontally (X), and 120 mm / 4.72 in. vertically (Y).
  - with each selector switch head (ZB5AD•, ZB5AJ•, ZB5AG•).

The fixing centers marked a and b are diagonally opposed and must align with those marked 4 and 5.

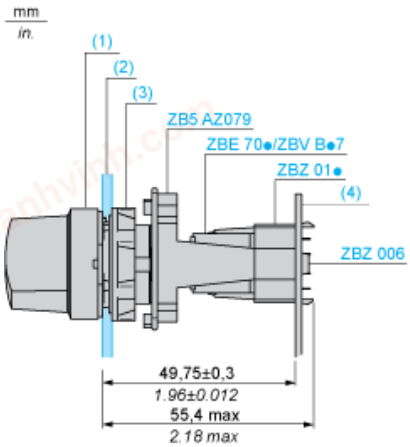

(1) Head ZB5AD•
(2) Panel
(2) Nut
(4) Printed circuit board

Life Is On Schneider Electric

Mounting of Adapter (Socket) ZBZ01•

- 1 2 elongated holes for ZBZ006 screw access
- 2 1 hole Ø 2.4 mm ± 0.05 / 0.09 in. ± 0.002 for centring adapter ZBZ01•
- 3 8 × Ø 1.2 mm / 0.05 in. holes
- 4 1 hole Ø 2.9 mm ± 0.05 / 0.11 in. ± 0.002, for aligning the printed circuit board (with cut-out marked a)
- 5 1 elongated hole for aligning the printed circuit board (with cut-out marked b)
- 6 4 holes Ø 2.4 mm / 0.09 in. for clipping in adapter ZBZ01•

Dimensions An + 18.1 relate to the Ø 2.4 mm ± 0.05 / 0.09 in. ± 0.002 holes for centring adapter ZBZ01•.

chanhvinh.com

Product data sheet
Technical Description

ZB5AA8

Electrical Composition Corresponding to Code C1



Life Is On Schneider Electric

chanhvinh.com

Product data sheet
Technical Description

ZB5AA8

Electrical Composition Corresponding to Code C2



chanhvinh.com

Product data sheet
Technical Description

ZB5AA8

Electrical Composition Corresponding to Codes C9, C11, SF1 and SR1

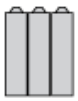

Life Is On Schneider Electric

chanhvinh.com

Product data sheet
Technical Description

ZB5AA8

Electrical Composition Corresponding to Code C15

1 N/O

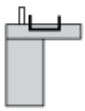

1 N/C

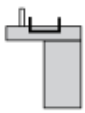

1 N/O + N/C or 1 N/O + N/O or 1 N/C + N/C

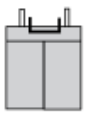

chanhvinh.com

Product data sheet
Technical Description

ZB5AA8

Legend

Single contact



Double contact



Light block



Possible location



Life Is On Schneider Electric