chanhvinh.com

Product data sheet
Characteristics

XB5AW34B5C0
Illuminated push button, Harmony XB5, grey bezel, red flush, 22mm, universal LED, spring return, 1NO + 1NC, 24V AC



Main

Range of product	Harmony XB5
Product or component type	Illuminated push-button
Device short name	XB5
Bezel material	Plastic colour plated grey
Fixing collar material	Plastic
Head type	Standard
Mounting diameter	22 mm
Sale per indivisible quantity	1
Shape of signaling unit head	Round
Type of operator	Spring return
Operator profile	Red flush, unmarked
Operator additional information	With plain lens
Contacts type and composition	1 NO + 1 NC
Contact operation	Slow-break
Connections - terminals	Screw clamp terminals, <= 2 x 1.5 mm² with cable end conforming to IEC 60947-1 Screw clamp terminals, 1 x 0.22...2 x 2.5 mm² without cable end conforming to IEC 60947-1
Light source	Universal LED
Bulb base	Integral LED
[Us] rated supply voltage	24 V AC/DC 50/60 Hz
Cap/operator or lens colour	Red

Complementary

Height	42 mm
Width	30 mm
Depth	57 mm
Terminals description ISO n°1	(21-22)NC (13-14)NO
Net weight	0.056 kg
Resistance to high pressure washer	7000000 Pa at 55 °C, distance : 0.1 m
Contacts usage	Standard contacts
Positive opening	With conforming to IEC 60947-5-1 appendix K
Operating travel	1.5 Mm (NC changing electrical state) 2.6 Mm (NO changing electrical state) 4.3 mm (total travel)
Operating force	3.5 N NC changing electrical state 3.8 N
Mechanical durability	10000000 cycles
Tightening torque	0.8…1.2 N.m conforming to IEC 60947-1
Shape of screw head	Cross compatible with Philips no 1 screwdriver Cross compatible with pozidriv No 1 screwdriver Slotted compatible with flat Ø 4 mm screwdriver Slotted compatible with flat Ø 5.5 mm screwdriver

The information provided in this documentation contains general descriptions and/or technical characteristics of the performance of the products contained herein.
This documentation is not intended as a substitute for and is not to be used for determining suitability or reliability of these products for specific user applications.
It is the duty of any such user or integrator to perform the appropriate and complete risk analysis, evaluation and testing of the products with respect to the relevant specific application or use thereof.
Neither Schneider Electric Industries SAS nor any of its affiliates or subsidiaries shall be responsible or liable for misuse of the information contained herein.

chanhvinh.com

Contacts material	Silver alloy (Ag/Ni)
Short-circuit protection	10 A cartridge fuse type gG conforming to IEC 60947-5-1
[Ith] conventional free air thermal current	10 A conforming to IEC 60947-5-1
[Ui] rated insulation voltage	600 V (pollution degree 3) conforming to IEC 60947-1
[Uimp] rated impulse withstand voltage	6 kV conforming to IEC 60947-1
[Ie] rated operational current	3 A at 240 V, AC-15, A600 conforming to IEC 60947-5-1 6 A at 120 V, AC-15, A600 conforming to IEC 60947-5-1 0.1 A at 600 V, DC-13, Q600 conforming to IEC 60947-5-1 0.27 A at 250 V, DC-13, Q600 conforming to IEC 60947-5-1 0.55 A at 125 V, DC-13, Q600 conforming to IEC 60947-5-1 1.2 A at 600 V, AC-15, A600 conforming to IEC 60947-5-1
Electrical durability	1000000 Cycles, AC-15, 2 A at 230 V, operating rate <3600 cyc/h, load factor: 0.5 conforming to IEC 60947-5-1 appendix C 1000000 Cycles, AC-15, 3 A at 120 V, operating rate <3600 cyc/h, load factor: 0.5 conforming to IEC 60947-5-1 appendix C 1000000 Cycles, AC-15, 4 A at 24 V, operating rate <3600 cyc/h, load factor: 0.5 conforming to IEC 60947-5-1 appendix C 1000000 Cycles, DC-13, 0.2 A at 110 V, operating rate <3600 cyc/h, load factor: 0.5 conforming to IEC 60947-5-1 appendix C 1000000 cycles, DC-13, 0.5 A at 24 V, operating rate <3600 cyc/h, load factor: 0.5 conforming to IEC 60947-5-1 appendix C
Electrical reliability	Λ < 10exp(-6) at 5 V, 1 mA in clean environment conforming to IEC 60947-5-4 Λ < 10exp(-8) at 17 V, 5 mA in clean environment conforming to IEC 60947-5-4
Signalling type	Steady
Supply voltage limits	19.2…30 V DC 21.6…26.4 V AC
Current consumption	18 mA
Service life	100000 h at rated voltage and 25 °C
Surge withstand	1 kV conforming to IEC 61000-4-5
Device presentation	Complete product

Environment

Protective treatment	TH
Ambient air temperature for storage	-40…70 °C
Ambient air temperature for operation	-40…70 °C
Overvoltage category	Class II conforming to IEC 60536
IP degree of protection	IP66 conforming to IEC 60529 IP67
NEMA degree of protection	NEMA 13 NEMA 4X
IK degree of protection	IK05 conforming to IEC 50102
Standards	UL 508 IEC 60947-5-1 IEC 60947-5-4 IEC 60947-1 CSA C22.2 No 14 JIS C8201-5-1 JIS C8201-1
Product certifications	LROS (Lloyds register of shipping)[RETURN]UL listed[RETURN]CSA[RETURN]BV[RETURN]GL[RETURN]DNV
Vibration resistance	5 gn (f= 2…500 Hz) conforming to IEC 60068-2-6
Shock resistance	30 gn (duration = 18 ms) for half sine wave acceleration conforming to IEC 60068-2-27 50 gn (duration = 11 ms) for half sine wave acceleration conforming to IEC 60068-2-27
Resistance to fast transients	2 kV conforming to IEC 61000-4-4
Resistance to electromagnetic fields	10 V/m conforming to IEC 61000-4-3
Resistance to electrostatic discharge	6 KV on contact (on metal parts) conforming to IEC 61000-4-2 8 kV in free air (in insulating parts) conforming to IEC 61000-4-2
Electromagnetic emission	Class B conforming to IEC 55011

Offer Sustainability

REACh Regulation	REACh Declaration
EU RoHS Directive	Pro-active compliance (Product out of EU RoHS legal scope) EU RoHS Declaration
Mercury free	Yes
China RoHS Regulation	China RoHS Declaration
RoHS exemption information	Yes
WEEE	The product must be disposed on European Union markets following specific waste collection and never end up in rubbish bins

chanhvinh.com

Product data sheet
Dimensions Drawings

XB5AW34B5C0

Dimensions

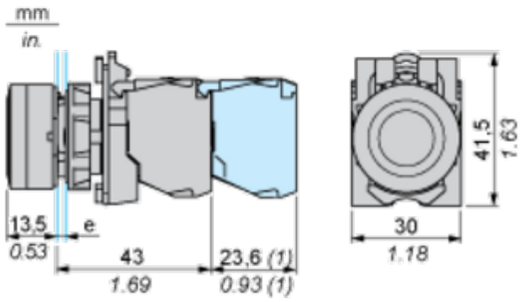

e: clamping thickness: 1 to 6 mm / 0.04 to 0.24 in.

(1) Additional row of contacts or double contact.

chanhvinh.com

Product data sheet
Mounting and Clearance

XB5AW34B5C0

Panel Cut-out for Pushbuttons, Switches and Pilot Lights (Finished Holes, Ready for Installation)

Connection by Screw Clamp Terminals or Plug-in Connectors or on Printed Circuit Board

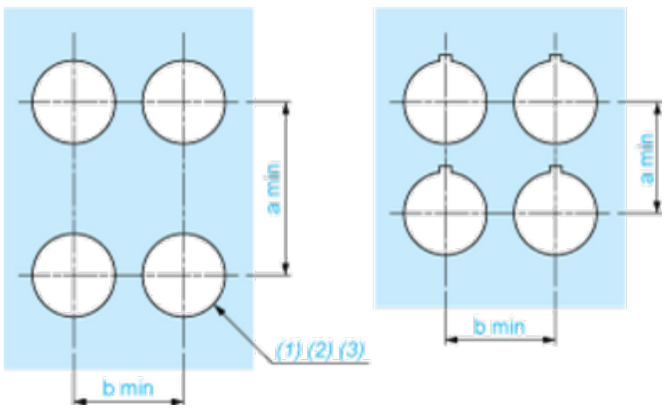

(1) Diameter on finished panel or support

(2) For selector switches and Emergency stop buttons, use of an anti-rotation plate type ZB5AZ902 is recommended.

(3) Ø22.5 mm recommended (Ø22.3 $_{0}^{+0.4}$) / Ø0.89 in. recommended (Ø0.88 in. $_{0}^{+0.016}$)

Connections	a in mm	a in in.	b in mm	b in in.
By screw clamp terminals or plug-in connector	40	1.57	30	1.18
By Faston connectors	45	1.77	32	1.26
On printed circuit board	30	1.18	30	1.18

Detail of Lug Recess

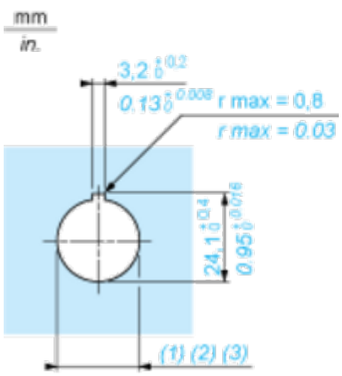

(1) Diameter on finished panel or support

(2) For selector switches and Emergency stop buttons, use of an anti-rotation plate type ZB5AZ902 is recommended.

(3) Ø22.5 mm recommended (Ø22.3 $_{0}^{+0.4}$) / Ø0.89 in. recommended (Ø0.88 in. $_{0}^{+0.016}$)