chanhvinh.com

Product datasheet

Specifications



Push-to-test pilot light, Harmony XB4, metal, blue, universal LED, screw clamp terminals, 110...120V

Local distributor code:

409067686 XB4BW26G5

Important message: A change in appearance may be noted on the product but does not affect its use in terms of function and safety. This makes it compatible with our Universal LED blocks
EAN Code: 3606489420666

Main

Range of product	Harmony XB4
Product or component type	Push-to-test pilot light
Device short name	XB4
Bezel material	Metal

Complementary

Fixing collar material	Metal
Mounting diameter	22.5 mm
Sale per indivisible quantity	1
Height	42 mm
Width	30 mm
Depth	55 mm
Net weight	0.09 kg
Resistance to high pressure washer	7000000 Pa at 55 °C, distance : 0.1 m
Embedding depth	43 mm
Shape of signaling unit head	Round
Cap/operator or lens colour	Blue
Connections - terminals	Screw clamp terminals, <= 2 x 1.5 mm² with cable end conforming to IEC 60068-2-27 Screw clamp terminals, 1 x 0.22...2 x 2.5 mm² without cable end conforming to IEC 60068-2-27
Tightening torque	0.8…1.2 N.m conforming to IEC 60947-1
[Ui] rated insulation voltage	600 V (pollution degree 3) conforming to IEC 60947-1
[Uimp] rated impulse withstand voltage	6 kV conforming to IEC 60947-1
Signalling type	Steady
Light source	Universal LED
Light source colour	Blue
Current consumption	14 mA
Service life	1.5 year(s)
Surge withstand	1 kV
[Us] rated supply voltage	110...120 V AC at 50/60 Hz

Disclaimer: This documentation is not intended as a substitute for and is not to be used for determining suitability or reliability of these products for specific user applications

chanhvinh.com

Environment

Protective treatment	TH
Ambient air temperature for storage	-40…70 °C
Ambient air temperature for operation	-40…70 °C
Overvoltage category	Class II conforming to IEC 60536
IP degree of protection	IP66 conforming to IEC 60536 IP67 IP69 IP69K
NEMA degree of protection	NEMA 13 conforming to IEC 60529 NEMA 4X
IK degree of protection	IK05 conforming to IEC 50102
Standards	CSA C22.2 No 14 IEC 60947-1 IEC 60947-5-1 IEC 60947-5-4 GB 14048.5 JIS C8201-5-1 UL 508 JIS C8201-1
Product certifications	CSA LROS (Lloyds register of shipping) BV UL listed DNV
Vibration resistance	5 gn (f= 12…500 Hz) conforming to IEC 60068-2-6
Shock resistance	30 gn (duration = 18 ms) for half sine wave acceleration conforming to IEC 60068-2-6 50 gn (duration = 11 ms) for half sine wave acceleration conforming to IEC 60068-2-6

Packing Units

Unit Type of Package 1	PCE
Number of Units in Package 1	1
Package 1 Height	5.33 cm
Package 1 Width	3.56 cm
Package 1 Length	8.89 cm
Package 1 Weight	0.1 kg

Logistical informations

Country of origin	FR

Contractual warranty

Warranty	18 months

chanhvinh.com

Environmental Data

Schneider Electric aims to achieve Net Zero status by 2050 through supply chain partnerships, lower impact materials, and circularity via our ongoing “Use Better, Use Longer, Use Again” campaign to extend product lifetimes and recyclability.

Environmental Data explained >

How we assess product sustainability >

Environmental footprint

Environmental Disclosure	Product Environmental Profile

Use Better

Materials and Substances

Packaging made with recycled cardboard	Yes
Packaging without single use plastic	Yes
EU RoHS Directive	Under investigation

Use Again

Repack and remanufacture

Circularity Profile	End of Life Information
Take-back	No

chanhvinh.com

chanhvinh.com

Product datasheet XB4BW26G5

Dimensions Drawings

Dimensions

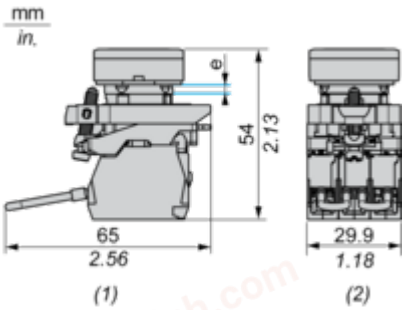

e: Panel thickness: 1 mm to 6 mm / 0.04 in. to 0.24 in
(1) Side view
(2) Top view

chanhvinh.com

Product datasheet XB4BW26G5

Mounting and Clearance

Panel Cut-out for Pushbuttons, Switches and Pilot Lights (Finished Holes, Ready for Installation)

Connection by Screw Clamp Terminals	Connection by Faston Connectors
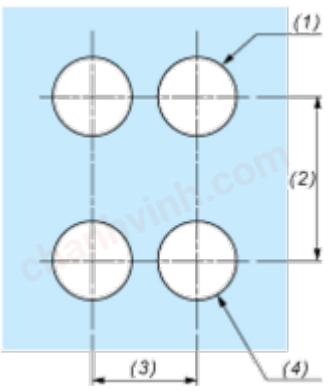	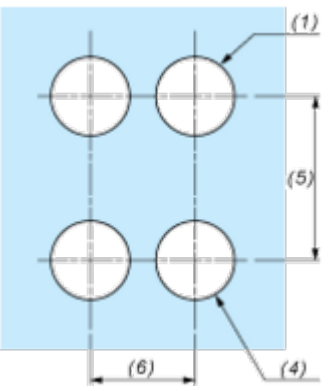

(1) Diameter on finished panel or support
(2) 40 mm min. / 1.57 in. min.
(3) 30 mm min. / 1.18 in. min.
(4) Ø 22.5 mm / 0.89 in. recommended (Ø 22.3 mm $_{0}^{+0.4}$ / 0.88 in. $_{0}^{+0.016}$)
(5) 45 mm min. / 1.78 in. min.
(6) 32 mm min. / 1.26 in. min.

chanhvinh.com

chanhvinh.com

Product datasheet XB4BW26G5

Technical Illustration

Dimensions

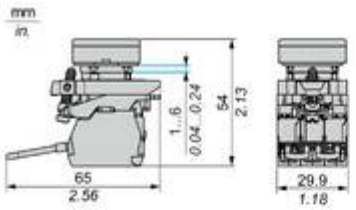

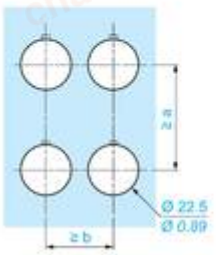

		a (mm)	*a (in.)*	b (mm)	*b (in.)*
ZBE●●●●●	ZBV●●●●	40	*1.57*	30	*1.18*
ZBE●●●●●3	ZBV●●●●3	45	*1.77*	32	*1.26*
ZBE●●●●●4	ZBV●●●●4	40	*1.57*	30	*1.18*
ZBE●●●●●5	ZBV●●●●5	50	*1.97*	30	*1.18*
ZBE●●●●●9	ZBV●●●●9	40	*1.57*	30	*1.18*
ZBRT●	ZBRV1	40	*1.57*	30	*1.18*