chanhvinh.com

Product datasheet

Specifications



dark grey station - green flush/red flush/green flush pushbuttons Ø22

Local distributor code:

393523058 XALD311

EAN Code: 3389110114652

Main

Range of product	Harmony XALD
Product or component type	Complete control station
Device short name	XALD
Product destination	For XB5 Ø 22 mm control and signalling units
Control station application	Three functions
Colour of base of enclosure	Light grey (RAL 7035)
Colour of cover	Dark grey (RAL 7016)
Material	Polycarbonate
Operator profile	3 flush push-buttons
Operators description	Green "AVANT" 1 NO - red "ARRET" 1 NC - green "ARRIERE" 1 NO
Control station composition	1 flush push-button, green 1 NO ARRIERE marking 1 flush push-button, green 1 NO AVANT marking 1 flush push-button, red 1 NC ARRET marking
Marking location	Marking on legend holder
Contact operation	Slow-break

Complementary

Cable entry	2 knock-outs for cable entry, clamping capacity: 14 mm 2 knock-outs for Pg 13 cable gland and ISO M20, clamping capacity: 12 mm
Net weight	0.299 kg
Resistance to high pressure washer	7000000 Pa at 55 °C, distance : 0.1 m
Positive opening	With conforming to IEC 60947-5-1 appendix K
Operating travel	1.5 mm (NC changing electrical state) 2.6 mm (NO changing electrical state) 4.3 mm (total travel)
Operating force	3.5 N NC changing electrical state 3.8 N NO changing electrical state
Mechanical durability	10000000 cycles
Connections - terminals	Screw clamp terminals, <= 2 x 1.5 mm² with cable end conforming to IEC 60947-1 Screw clamp terminals, >= 1 x 0.22 mm² without cable end conforming to IEC 60947-1
Tightening torque	0.8…1.2 N.m conforming to IEC 60947-1
Shape of screw head	Cross compatible with Philips no 1 screwdriver Cross compatible with pozidriv No 1 screwdriver Slotted compatible with flat Ø 4 mm screwdriver Slotted compatible with flat Ø 5.5 mm screwdriver

Disclaimer: This documentation is not intended as a substitute for and is not to be used for determining suitability or reliability of these products for specific user applications

chanhvinh.com

Contacts material	Silver alloy (Ag/Ni)
Short-circuit protection	10 A cartridge fuse type gG conforming to IEC 60947-5-1
[Ith] conventional free air thermal current	10 A conforming to IEC 60947-5-1
[Ui] rated insulation voltage	600 V (pollution degree 3) conforming to IEC 60947-1
[Uimp] rated impulse withstand voltage	6 kV conforming to IEC 60947-1
[Ie] rated operational current	6 A at 120 V, AC-15, A600 conforming to IEC 60947-5-1 3 A at 240 V, AC-15, A600 conforming to IEC 60947-5-1 1.2 A at 600 V, AC-15, A600 conforming to IEC 60947-5-1 0.55 A at 125 V, DC-13, Q600 conforming to IEC 60947-5-1 0.27 A at 250 V, DC-13, Q600 conforming to IEC 60947-5-1 0.1 A at 600 V, DC-13, Q600 conforming to IEC 60947-5-1
Electrical durability	1000000 cycles, AC-15, 2 A at 230 V, operating rate <3600 cyc/h, load factor: 0.5 conforming to IEC 60947-5-1 appendix C 1000000 cycles, AC-15, 3 A at 120 V, operating rate <3600 cyc/h, load factor: 0.5 conforming to IEC 60947-5-1 appendix C 1000000 cycles, AC-15, 4 A at 24 V, operating rate <3600 cyc/h, load factor: 0.5 conforming to IEC 60947-5-1 appendix C 1000000 cycles, DC-13, 0.2 A at 110 V, operating rate <3600 cyc/h, load factor: 0.5 conforming to IEC 60947-5-1 appendix C 1000000 cycles, DC-13, 0.5 A at 24 V, operating rate <3600 cyc/h, load factor: 0.5 conforming to IEC 60947-5-1 appendix C
Electrical reliability	Λ < 10exp(-6) at 5 V and 1 mA conforming to IEC 60947-5-4 Λ < 10exp(-8) at 17 V and 5 mA conforming to IEC 60947-5-4

Environment

Protective treatment	TH
Ambient air temperature for storage	-40…70 °C
Ambient air temperature for operation	-40…70 °C
Electrical shock protection class	Class II conforming to IEC 60536
IP degree of protection	IP66 conforming to IEC 60529 IP69 IP69K IP67
NEMA degree of protection	NEMA 13 NEMA 4X
IK degree of protection	IK03 conforming to IEC 62262
Standards	IEC 60947-5-1 UL 508 IEC 60947-1 CSA C22.2 No 14 JIS C8201-5-1 IEC 60947-5-5 IEC 60947-5-4 JIS C8201-1
Vibration resistance	5 gn (f= 12…500 Hz) conforming to IEC 60068-2-6
Shock resistance	30 gn (duration = 18 ms) for half sine wave acceleration conforming to IEC 60068-2-27 50 gn (duration = 11 ms) for half sine wave acceleration conforming to IEC 60068-2-27

Packing Units

Unit Type of Package 1	PCE
Number of Units in Package 1	1
Package 1 Height	7.100 cm
Package 1 Width	9.700 cm

chanhvinh.com

Package 1 Length	14.100 cm
Package 1 Weight	292.000 g
Unit Type of Package 2	S03
Number of Units in Package 2	25
Package 2 Height	30.000 cm
Package 2 Width	30.000 cm
Package 2 Length	40.000 cm
Package 2 Weight	7.740 kg

Logistical informations

Country of origin	FR

Contractual warranty

Warranty	18 months

chanhvinh.com
chanhvinh.com
chanhvinh.com
chanhvinh.com

chanhvinh.com

Environmental Data

Schneider Electric aims to achieve Net Zero status by 2050 through supply chain partnerships, lower impact materials, and circularity via our ongoing “Use Better, Use Longer, Use Again” campaign to extend product lifetimes and recyclability.

Environmental Data explained >

How we assess product sustainability >

Environmental footprint

Total lifecycle Carbon footprint	2
Environmental Disclosure	Product Environmental Profile

Use Better

Materials and Substances

Packaging made with recycled cardboard	Yes
Packaging without single use plastic	Yes
EU RoHS Directive	Pro-active compliance (Product out of EU RoHS legal scope)
REACh Regulation	REACh Declaration

Use Again

Repack and remanufacture

End of life manual availability	End of Life Information
Take-back	No
WEEE Label	The product must be disposed on European Union markets following specific waste collection and never end up in rubbish bins

chanhvinh.com

Product datasheet XALD311

Dimensions Drawings

Dimensions

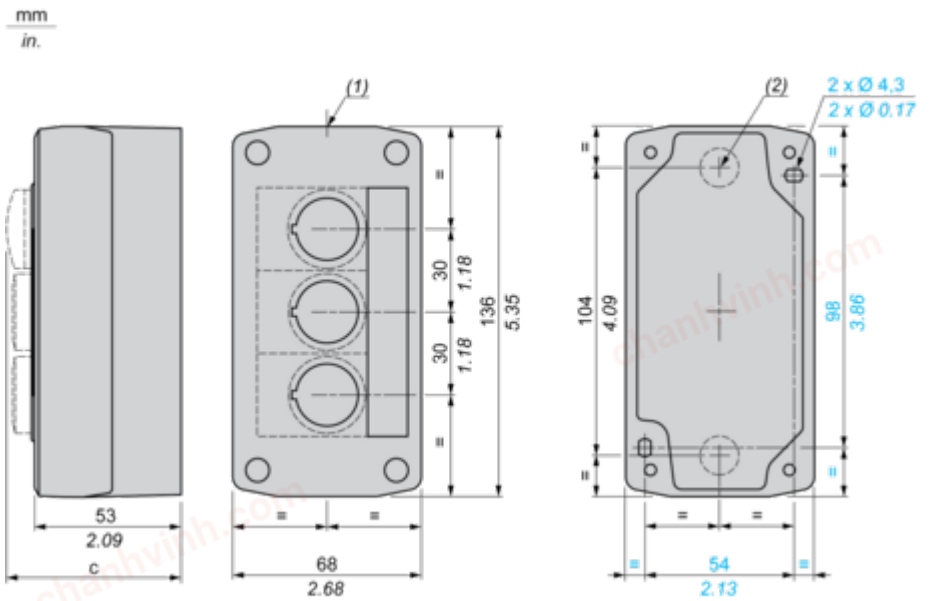

(1) 2 knock-outs for Pg 13.5 cable gland, maximum capacity 12 mm/0.47 in.
(2) Knock-out for cable entry, maximum capacity 14 mm/0.55 in.

Control station fitted with:	c in mm	c in in.
Flush pushbutton	62	2.44
Illuminated pushbutton	64	2.52
Pilot light	65.5	2.58
Projecting pushbutton	66	2.60
Selector switch	80	3.15
Key switch	105.5	4.15

chanhvinh.com

Product datasheet XALD311

Technical Illustration

Dimensions

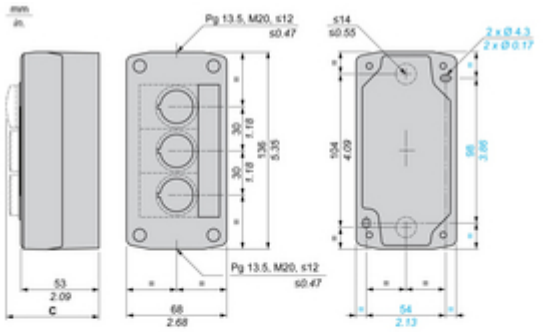

C		mm	in.
	ZB5AA●, ZB5AH0●	62	2.44
	ZB5AV●	64	2.52
	ZB5AW3●	65.5	2.58
	ZB5AL●, ZB5AW1●, ZB5AH●, ZB5AH●3	66	2.6
	ZB5AD●, ZB5AK●	80	3.15
	ZB5AS8●, ZB5AT●, ZB5AC●, ZB5AR●, ZB5AW4●, ZB5AW6●, ZB5AS4●, ZB5AS5●, ZB5AS6●	91.5	3.58
	ZB5AS9●, ZB5AS1●, ZB5AS7●	115	4.53
	ZB5AG●	105.5	4.15