chanhvinh.com

Product data sheet
Characteristics

SSD1A320BDC3
Harmony, Solid state relay, 20 A, DIN rail mount, zero voltage switching, input 4...32 V DC, output 48...600 V AC



Main

Range of product	Harmony Solid State Relays
Product or component type	Solid state relay up to 20 A
Device short name	SSD1
Number of channels	1
Number of phases	1 phase
Product configuration type	Contactor configuration with pluggable spring input
Mounting support	35 mm symmetrical DIN rail conforming to EN/IEC 60715
Rated current	20 A
Output switching mode	Zero voltage switching

Complementary

Operating frequency	47...440 Hz
Rated duty	Uninterrupted
Output voltage	48...600 V AC
Control circuit voltage	4...32 V DC
Tightening torque	2...2.2 N.m for load output 18...20 lb.in for load output
Connections - terminals	Plug-inspring terminals, clamping connection capacity:0.13...3.30 mm², AWG 26...AWG 12 for input Telescopic screw, clamping connection capacity:0.75...10 mm², AWG 20...AWG 8 for output
Dielectric strength	4 KV AC for input/output circuit 4 kV AC for input or output to case
Rated impulse withstand voltage	6 KV for input/output circuit 6 kV for input or output to case
Insulation resistance	1000 MOhm at 500 V DC
Local signalling	LED (green) for control voltage
Pick-up voltage	4 V DC turn-on
Drop-out voltage	1 V DC turn-off
Input current range	10…15 mA
Solid state switching type	Zero voltage switching
Load current	0.1…20 A
Transient overvoltage	1200 V
Inrush current	300 A at 60 Hz
Maximum voltage drop	<1.3 V on-state
Motor controller rating	0.37 KW/0.5 Hp at 120 V AC 1.12 KW/1.5 Hp at 240 V AC 2.24 kW/3 hp at 480 V AC

The information provided in this documentation contains general descriptions and/or technical characteristics of the performance of the products contained herein.
This documentation is not intended as a substitute for and is not to be used for determining suitability or reliability of these products for specific user applications.
It is the duty of any such user or integrator to perform the appropriate and complete risk analysis, evaluation and testing of the products with respect to the relevant specific application or use thereof.
Neither Schneider Electric Industries SAS nor any of its affiliates or subsidiaries shall be responsible or liable for misuse of the information contained herein.

chanhvinh.com

Electromagnetic compatibility	Electrostatic discharge 6 kV criteria A contact discharge conforming to IEC 61000-4-2 Electrostatic discharge 8 kV criteria A air discharge conforming to IEC 61000-4-2 Conducted RF disturbances 10 V, 0.15...80 MHz criteria A level 3 conforming to IEC 61000-4-6 Electrical fast transient/burst immunity test 2 kV, 5/100 kHz criteria B output ports conforming to IEC 61000-4-4 Electrical fast transient/burst immunity test 1 kV, 5/100 kHz criteria B input ports conforming to IEC 61000-4-4 Radiated radio-frequency electromagnetic field immunity test 10 V/m, 80 MHz...1 GHz criteria A conforming to IEC 61000-4-3 Radiated radio-frequency electromagnetic field immunity test 3 V/m, 1.4...2 GHz criteria A conforming to IEC 61000-4-3 Radiated radio-frequency electromagnetic field immunity test 1 V/m, 2...2.7 GHz criteria A conforming to IEC 61000-4-3 Surge immunity test 1 kV criteria A output ports line to line conforming to IEC 61000-4-5 Surge immunity test 2 kV criteria B output ports line to earth conforming to IEC 61000-4-5 Radiated emission environment B for DC input supply conforming to IEC 60947-4-3 Conducted emission environment B for DC input supply conforming to IEC 60947-4-3 Immunity to microbreaks and voltage drops 30 %, 500 ms criteria A conforming to IEC 61000-4-11 Immunity to microbreaks and voltage drops 100 %, 20 ms criteria B conforming to IEC 61000-4-11
Device form designation	Form 5 semiconductor output DOL contactor
Maximum I^2t for fusing	409 $A^2.S$ for 10 ms 375 $A^2.s$ for 8.33 ms
Maximum leakage current	1 mA off-state
DV/dt	500 V/µs off-state at maximum rated voltage
Response time	0.5 cycle (turn-on) 0.5 cycle (turn-off)
Power factor	0.5 with maximum load
Short circuit protection coordination	Type 1 Type 2
Overvoltage category	III
Width	22.5 mm
Height	91.9 mm
Depth	133.8 mm
Net weight	0.301 kg
Device presentation	Complete product

Environment

Flammability rating	V-0 conforming to UL 94
Vibration resistance	0.75 mm (f = 10…150 Hz) conforming to EN/IEC 60068-2-6
Shock resistance	50 gn for 11 ms (peak acceleration) , longitudinal position conforming to EN/IEC 60068-2-27 30 gn for 11 ms (peak acceleration) , vertical position conforming to EN/IEC 60068-2-27
Pollution degree	2
Standards	IEC 61373:class B: category 1 IEC 60947-4-3 IEC 62314 IEC 60950-1 CSA C22.2 No 14-13 UL 508
IP degree of protection	IP20
Ambient air temperature for operation	-40…80 °C
Ambient air temperature for storage	-40…100 °C

Packing Units

Unit Type of Package 1	PCE
Package 1 Length	2.5 cm
Number of Units in Package 1	1
Package 2 Width	30 cm
Package 2 Height	15 cm
Package 2 Weight	8.224 kg
Package 1 Width	14 cm
Package 1 Height	9.8 cm
Package 1 Weight	324 g
Number of Units in Package 2	24
Unit Type of Package 2	S02
Package 2 Length	40 cm

Offer Sustainability

Sustainable offer status	Green Premium product
REACh Regulation	REACh Declaration
EU RoHS Directive	Pro-active compliance (Product out of EU RoHS legal scope) EU RoHS Declaration
Mercury free	Yes
RoHS exemption information	Yes
China RoHS Regulation	China RoHS Declaration
Environmental Disclosure	Product Environmental Profile
Circularity Profile	End Of Life Information
WEEE	The product must be disposed on European Union markets following specific waste collection and never end up in rubbish bins

Contractual warranty

Warranty	18 mois

chanhvinh.com

Product data sheet SSD1A320BDC3

Dimensions Drawings

Dimensions

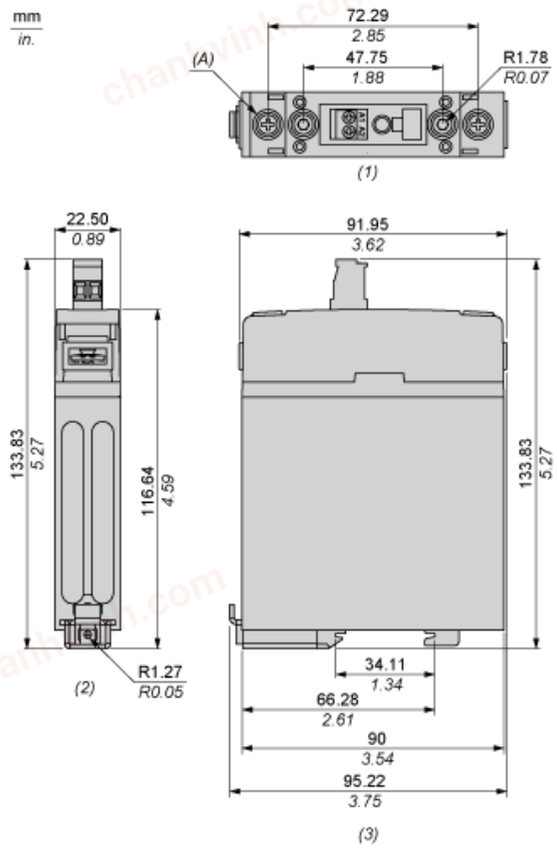

(1) Front view
(2) Top view
(3) Side view
(A) Screw 8-32 Stud Elevator Profile 1/4 48 UNS (2 Places)

Life Is On Schneider Electric

chanhvinh.com

Product data sheet
Performance Curves

SSD1A320BDC3

Derating Curves

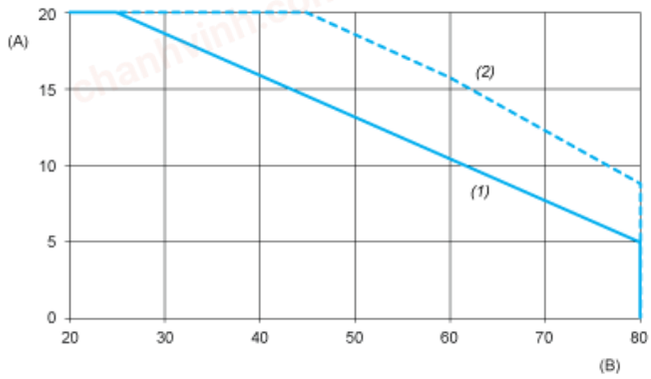

A : Load Current (Amperes)
B : Ambient Temperature (°C)
1 : Multiple units, no minimum spacing between components
2 : Installed single unit, distance to adjacent components more than 22.5 mm