chanhvinh.com

# Product data sheet
## Characteristics

# SR3B261B
## Modular smart relay Zelio Logic - 26 I O - 24 V AC - clock - display

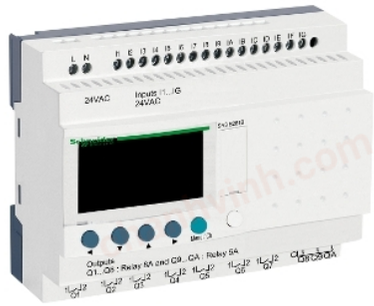

### Main

| | |
|---|---|
| Range of product | Zelio Logic |
| Product or component type | Modular smart relay |

### Complementary

| | |
|---|---|
| Local display | With |
| Number or control scheme lines | 0…500 FBD<br>0…240 ladder |
| Cycle time | 6…90 ms |
| Backup time | 10 years 77 °F (25 °C) |
| Clock drift | 12 min/year 32…131 °F (0…55 °C)<br>6 s/month 77 °F (25 °C) |
| Checks | Program memory on each power up |
| [Us] rated supply voltage | 24 V |
| Supply voltage limits | 20.4…28.8 V |
| Supply frequency | 50/60 Hz |
| Maximum supply current | 280 MA without extension)<br>415 mA with extensions) |
| Power consumption in VA | 10 VA with extensions<br>7.5 VA without extension |
| Isolation voltage | 1780 V |
| Protection type | Against inversion of terminals (control instructions not executed) |
| Discrete input number | 16 |
| Discrete input voltage | 24 V AC |
| Discrete input current | 4.4 mA |
| Discrete input frequency | 47...53 Hz<br>57...63 Hz |
| Voltage state 1 guaranteed | >= 14 V discrete input |
| Voltage state 0 guaranteed | <= 5 V discrete input |
| Current state 1 guaranteed | >= 2 mA discrete input) |
| Current state 0 guaranteed | <= 0.5 mA discrete input) |
| Input impedance | 4.6 kOhm discrete input |
| Number of outputs | 10 relay |
| Output voltage limits | 5...30 V DC relay output)<br>24...250 V AC |
| Contacts type and composition | NO relay output |
| Output thermal current | 5 A for 2 outputs relay output<br>8 A for 8 outputs relay output |
| Electrical durability | AC-12 500000 cycles 230 V, 1.5 A relay output EN/IEC 60947-5-1<br>AC-15 500000 cycles 230 V, 0.9 A relay output EN/IEC 60947-5-1<br>DC-12 500000 cycles 24 V, 1.5 A relay output EN/IEC 60947-5-1<br>DC-13 500000 cycles 24 V, 0.6 A relay output EN/IEC 60947-5-1 |

The information provided in this documentation contains general descriptions and/or technical characteristics of the performance of the products contained herein.
This documentation is not intended as a substitute for and is not to be used for determining suitability or reliability of these products for specific user applications.
It is the duty of any such user or integrator to perform the appropriate and complete risk analysis, evaluation and testing of the products with respect to the relevant specific application or use thereof.
Neither Schneider Electric Industries SAS nor any of its affiliates or subsidiaries shall be responsible or liable for misuse of the information contained herein.

| | |
|---|---|
| Switching capacity in mA | >= 10 mA 12 V relay output) |
| Operating rate in Hz | 0.1 Hz at Ie)relay output<br>10 Hz no load)relay output |
| Mechanical durability | 10000000 cycles relay output |
| [Uimp] rated impulse withstand voltage | 4 kV EN/IEC 60947-1 and EN/IEC 60664-1 |
| Clock | With |
| Response time | 50 ms ladder from state 0 to state 1)discrete input<br>50 ms ladder from state 1 to state 0)discrete input<br>50...255 ms FBD from state 0 to state 1)discrete input<br>50...255 ms FBD from state 1 to state 0)discrete input<br>10 ms from state 0 to state 1)relay output<br>5 ms from state 1 to state 0)relay output |
| Connections - terminals | Screw terminals, 1 x 0.2...1 x 2.5 mm² AWG 25...AWG 14) semi-solid<br>Screw terminals, 1 x 0.2...1 x 2.5 mm² AWG 25...AWG 14) solid<br>Screw terminals, 1 x 0.25...1 x 2.5 mm² AWG 24...AWG 14) flexible with cable end<br>Screw terminals, 2 x 0.2...2 x 1.5 mm² AWG 24...AWG 16) solid<br>Screw terminals, 2 x 0.25...2 x 0.75 mm² AWG 24...AWG 18) flexible with cable end |
| Tightening torque | 4.43 lbf.in (0.5 N.m) |
| Overvoltage category | III EN/IEC 60664-1 |
| Net Weight | 0.88 lb(US) (0.4 kg) |

## Environment

| | |
|---|---|
| Immunity to microbreaks | 10 ms repeated 20 times |
| Product certifications | GOST<br>GL<br>UL<br>CSA<br>C-tick |
| Standards | EN/IEC 61000-4-5<br>EN/IEC 61000-4-11<br>EN/IEC 61000-4-2 level 3<br>EN/IEC 61000-4-6 level 3<br>EN/IEC 60068-2-6 Fc<br>EN/IEC 60068-2-27 Ea<br>EN/IEC 61000-4-4 level 3<br>EN/IEC 61000-4-3<br>EN/IEC 61000-4-12 |
| IP degree of protection | IP20 IEC 60529 terminal block)<br>IP40 IEC 60529 front panel) |
| Environmental characteristic | EMC directive EN/IEC 61000-6-2<br>EMC directive EN/IEC 61000-6-3<br>EMC directive EN/IEC 61000-6-4<br>EMC directive EN/IEC 61131-2 zone B<br>Low voltage directive EN/IEC 61131-2 |
| Disturbance radiated/conducted | Class B EN 55022-11 group 1 |
| Pollution degree | 2 EN/IEC 61131-2 |
| Ambient air temperature for operation | -4…104 °F (-20…40 °C) in non-ventilated enclosure IEC 60068-2-1 and IEC 60068-2-2<br>-4…131 °F (-20…55 °C) IEC 60068-2-1 and IEC 60068-2-2 |
| Ambient air temperature for storage | -40…158 °F (-40…70 °C) |
| Operating altitude | 6561.68 ft (2000 m) |
| Maximum altitude transport | 10000.00 ft (3048 m) |
| Relative humidity | 95 % without condensation or dripping water |

## Ordering and shipping details

| | |
|---|---|
| Category | 22378 - SR2,3 ZELIO 2 RELAYS |
| Discount Schedule | I |
| GTIN | 00785901571902 |
| Nbr. of units in pkg. | 1 |
| Package weight(Lbs) | 0.84 lb(US) (0.38 kg) |
| Returnability | Yes |
| Country of origin | FR |

## Packing Units

| | |
|---|---|
| Unit Type of Package 1 | PCE |
| Package 1 Height | 2.68 in (6.8 cm) |
| Package 1 width | 3.94 in (10 cm) |
| Package 1 Length | 5.31 in (13.5 cm) |
| Unit Type of Package 2 | S03 |
| Number of Units in Package 2 | 20 |
| Package 2 Weight | 18.16 lb(US) (8.238 kg) |
| Package 2 Height | 11.81 in (30 cm) |
| Package 2 width | 11.81 in (30 cm) |
| Package 2 Length | 15.75 in (40 cm) |

## Offer Sustainability

| | |
|---|---|
| Sustainable offer status | Green Premium product |
| California proposition 65 | WARNING: This product can expose you to chemicals including: Lead and lead compounds, which is known to the State of California to cause cancer and birth defects or other reproductive harm. For more information go to www.P65Warnings.ca.gov |
| REACh Regulation | REACh Declaration |
| EU RoHS Directive | Pro-active compliance (Product out of EU RoHS legal scope) EU RoHS Declaration |
| Mercury free | Yes |
| RoHS exemption information | Yes |
| China RoHS Regulation | China RoHS Declaration |
| Environmental Disclosure | Product Environmental Profile |
| Circularity Profile | End Of Life Information |
| WEEE | The product must be disposed on European Union markets following specific waste collection and never end up in rubbish bins. |
| PVC free | Yes |

## Contractual warranty

| | |
|---|---|
| Warranty | 18 months |

chanhvinh.com

# Product data sheet
## Dimensions Drawings

SR3B261B

## Compact and Modular Smart Relays

### Mounting on 35 mm/1.38 in. DIN Rail

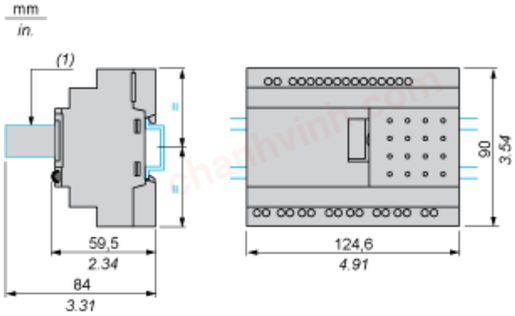


(1) With SR2USB01 or SR2BTC01

### Screw Fixing (Retractable Lugs)

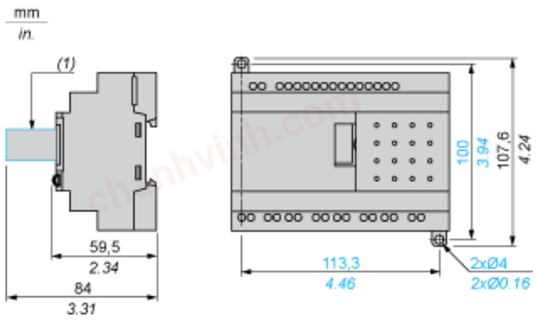


(1) With SR2USB01 or SR2BTC01

### Position of Display

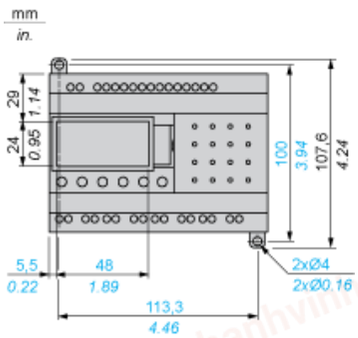



Life Is On Schneider Electric

chanhvinh.com

# Product data sheet
## Connections and Schema

SR3B261B

## Connection of Smart Relays on AC Supply

### SR••••1B, SR••••1FU

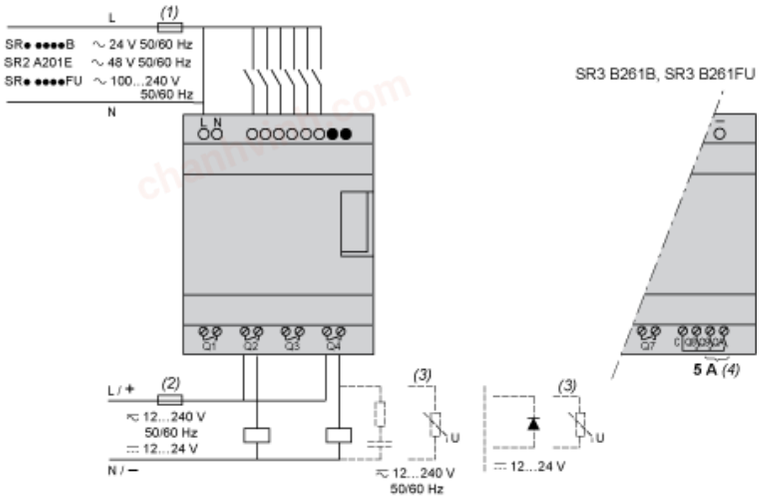


(1) 1 A quick-blow fuse or circuit-breaker.
(2) Fuse or circuit-breaker.
(3) Inductive load.
(4) Q9 and QA: 5 A (max. current in terminal C: 10 A).

### With Discrete I/O Extension Module

SR3B•••B + SR3XT•••B, SR3B•••FU + SR3XT•••FU

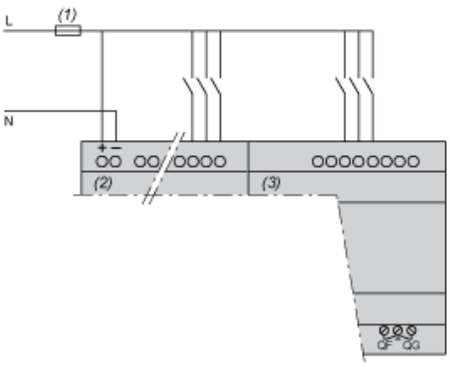


(1) 1 A quick-blow fuse or circuit-breaker.
NOTE: QF and QG: 5 A for SR3XT141••

chanhvinh.com

# Product data sheet
## Performance Curves

SR3B261B

## Compact and Modular Smart Relays

### Electrical Durability of Relay Outputs

(in millions of operating cycles, conforming to IEC/EN 60947-5-1)

AC-12 (1)

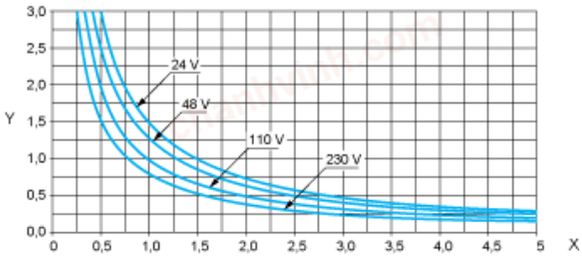


X: Current (A)
Y: Millions of operating cycles
(1) AC-12: switching resistive loads and opto-coupler isolated solid-state loads, cos ≥ 0.9.

AC-14 (1)

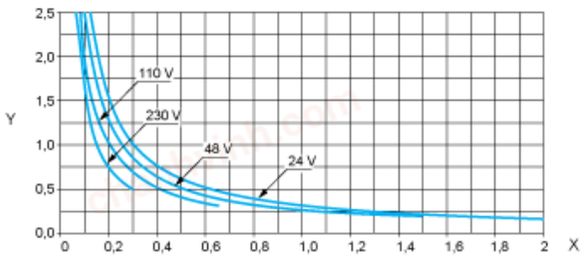


X: Current (A)
Y: Millions of operating cycles
(1) AC-14: switching small electromagnetic loads ≤ 72 VA, make: cos = 0.3, break: cos = 0.3.

AC-15 (1)

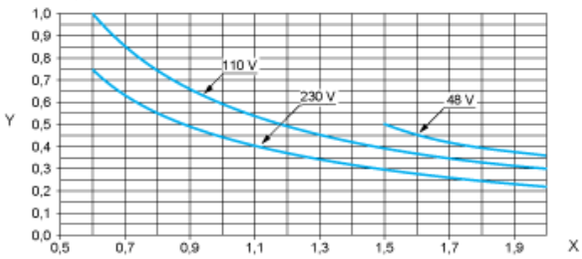


X: Current (A)
Y: Millions of operating cycles
(1) AC-15: switching electromagnetic loads ≥ 72 VA, make: cos = 0.7, break: cos = 0.4.


Life Is On Schneider Electric