chanhvinh.com

Product data sheet
Characteristics

SR2B201FU
compact smart relay Zelio Logic - 20 I O - 100..240 V AC - clock - display

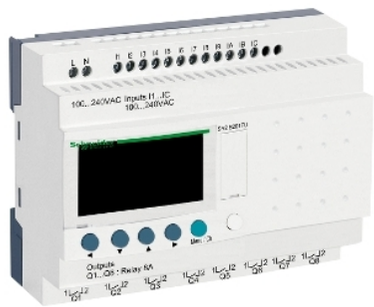

Main

Range of product	Zelio Logic
Product or component type	Compact smart relay

Complementary

Local display	With
Number or control scheme lines	0…240 ladder 0…500 FBD
Cycle time	6…90 ms
Backup time	10 years 77 °F (25 °C)
Clock drift	12 min/year 32…131 °F (0…55 °C) 6 s/month 77 °F (25 °C)
Checks	Program memory on each power up
[Us] rated supply voltage	100...240 V AC
Supply voltage limits	85…264 V
Supply frequency	50/60 Hz
Maximum supply current	100 MA 100 V without extension) 50 mA 240 V without extension)
Power consumption in VA	11 VA without extension
Isolation voltage	1780 V
Protection type	Against inversion of terminals (control instructions not executed)
Discrete input number	12
Discrete input voltage	100...240 V AC
Discrete input current	0.6 mA
Discrete input frequency	57...63 Hz 47...53 Hz
Voltage state 1 guaranteed	>= 79 V discrete input
Voltage state 0 guaranteed	<= 40 V discrete input
Current state 1 guaranteed	>= 0.17 mA discrete input)
Current state 0 guaranteed	<= 0.5 mA discrete input)
Input impedance	350 kOhm discrete input
Number of outputs	8 relay
Output voltage limits	5...30 V DC relay output) 24...250 V AC
Contacts type and composition	NO relay output
Output thermal current	8 A for all 8 outputs relay output
Electrical durability	AC-12 500000 cycles 230 V, 1.5 A relay output EN/IEC 60947-5-1 AC-15 500000 cycles 230 V, 0.9 A relay output EN/IEC 60947-5-1 DC-12 500000 cycles 24 V, 1.5 A relay output EN/IEC 60947-5-1 DC-13 500000 cycles 24 V, 0.6 A relay output EN/IEC 60947-5-1
Switching capacity in mA	>= 10 mA 12 V relay output)

The information provided in this documentation contains general descriptions and/or technical characteristics of the performance of the products contained herein.
This documentation is not intended as a substitute for and is not to be used for determining suitability or reliability of these products for specific user applications.
It is the duty of any such user or integrator to perform the appropriate and complete risk analysis, evaluation and testing of the products with respect to the relevant specific application or use thereof.
Neither Schneider Electric Industries SAS nor any of its affiliates or subsidiaries shall be responsible or liable for misuse of the information contained herein.

Operating rate in Hz	0.1 Hz at Ie)relay output 10 Hz no load)relay output
Mechanical durability	10000000 cycles relay output
[Uimp] rated impulse withstand voltage	4 kV EN/IEC 60947-1 and EN/IEC 60664-1
Clock	With
Response time	50 ms ladder from state 0 to state 1)discrete input 50 ms ladder from state 1 to state 0)discrete input 50...255 ms FBD from state 0 to state 1)discrete input 50...255 ms FBD from state 1 to state 0)discrete input 10 ms from state 0 to state 1)relay output 5 ms from state 1 to state 0)relay output
Connections - terminals	Screw terminals, 1 x 0.2...1 x 2.5 mm² AWG 25...AWG 14) semi-solid Screw terminals, 1 x 0.2...1 x 2.5 mm² AWG 25...AWG 14) solid Screw terminals, 1 x 0.25...1 x 2.5 mm² AWG 24...AWG 14) flexible with cable end Screw terminals, 2 x 0.2...2 x 1.5 mm² AWG 24...AWG 16) solid Screw terminals, 2 x 0.25...2 x 0.75 mm² AWG 24...AWG 18) flexible with cable end
Tightening torque	4.43 lbf.in (0.5 N.m)
Overvoltage category	III EN/IEC 60664-1
Net Weight	0.84 lb(US) (0.38 kg)

Environment

Immunity to microbreaks	1 ms
Product certifications	C-tick CSA GL GOST UL
Standards	EN/IEC 61000-4-6 level 3 EN/IEC 61000-4-11 EN/IEC 60068-2-27 Ea EN/IEC 61000-4-5 EN/IEC 60068-2-6 Fc EN/IEC 61000-4-12 EN/IEC 61000-4-2 level 3 EN/IEC 61000-4-3 EN/IEC 61000-4-4 level 3
IP degree of protection	IP20 IEC 60529 terminal block) IP40 IEC 60529 front panel)
Environmental characteristic	EMC directive EN/IEC 61000-6-2 EMC directive EN/IEC 61000-6-3 EMC directive EN/IEC 61000-6-4 EMC directive EN/IEC 61131-2 zone B Low voltage directive EN/IEC 61131-2
Disturbance radiated/conducted	Class B EN 55022-11 group 1
Pollution degree	2 EN/IEC 61131-2
Ambient air temperature for operation	-4…104 °F (-20…40 °C) in non-ventilated enclosure IEC 60068-2-1 and IEC 60068-2-2 -4…131 °F (-20…55 °C) IEC 60068-2-1 and IEC 60068-2-2
Ambient air temperature for storage	-40…158 °F (-40…70 °C)
Operating altitude	6561.68 ft (2000 m)
Maximum altitude transport	10000.00 ft (3048 m)
Relative humidity	95 % without condensation or dripping water

Ordering and shipping details

Category	22378 - SR2,3 ZELIO 2 RELAYS
Discount Schedule	I
GTIN	00785901693895
Nbr. of units in pkg.	1
Package weight(Lbs)	0.8 lb(US) (0.36 kg)
Returnability	Yes
Country of origin	FR

Packing Units

Unit Type of Package 1	PCE
Package 1 Height	2.68 in (6.8 cm)
Package 1 width	3.94 in (10 cm)
Package 1 Length	5.31 in (13.5 cm)
Unit Type of Package 2	S03
Number of Units in Package 2	20
Package 2 Weight	17.55 lb(US) (7.962 kg)
Package 2 Height	11.81 in (30 cm)
Package 2 width	11.81 in (30 cm)
Package 2 Length	15.75 in (40 cm)

Offer Sustainability

Sustainable offer status	Green Premium product
California proposition 65	WARNING: This product can expose you to chemicals including: Lead and lead compounds, which is known to the State of California to cause cancer and birth defects or other reproductive harm. For more information go to www.P65Warnings.ca.gov
REACh Regulation	REACh Declaration
EU RoHS Directive	Pro-active compliance (Product out of EU RoHS legal scope) EU RoHS Declaration
Mercury free	Yes
RoHS exemption information	Yes
China RoHS Regulation	China RoHS Declaration
Environmental Disclosure	Product Environmental Profile
Circularity Profile	End Of Life Information
WEEE	The product must be disposed on European Union markets following specific waste collection and never end up in rubbish bins.
PVC free	Yes

Contractual warranty

Warranty	18 months

chanhvinh.com

Product data sheet
Dimensions Drawings

SR2B201FU

Compact and Modular Smart Relays

Mounting on 35 mm/1.38 in. DIN Rail

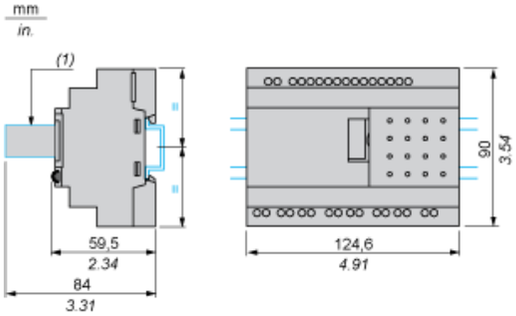

(1) With SR2USB01 or SR2BTC01

Screw Fixing (Retractable Lugs)

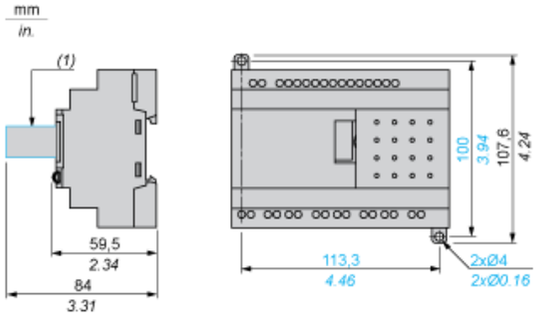

(1) With SR2USB01 or SR2BTC01

Position of Display

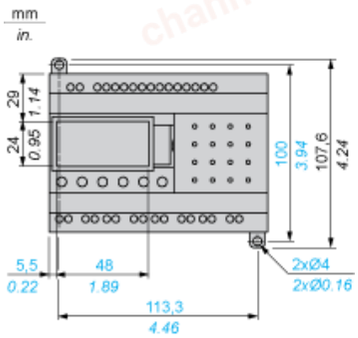

Life Is On Schneider Electric

chanhvinh.com

Product data sheet SR2B201FU
Connections and Schema

Connection of Smart Relays on AC Supply

SR••••1B, SR••••1FU

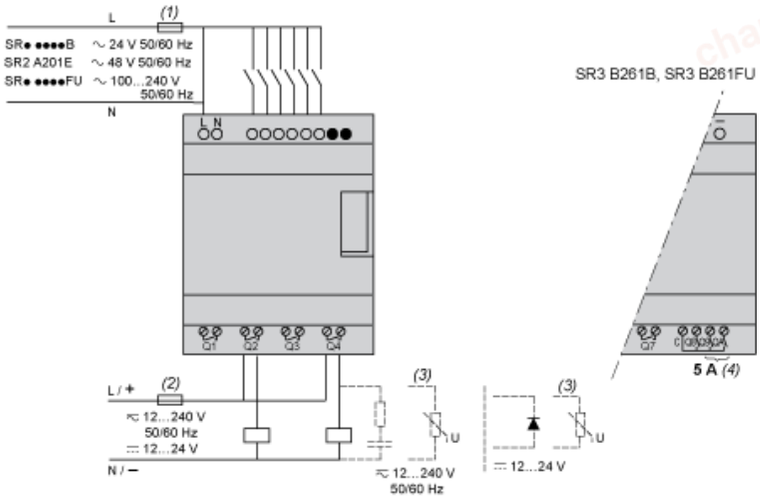

(1) 1 A quick-blow fuse or circuit-breaker.
(2) Fuse or circuit-breaker.
(3) Inductive load.
(4) Q9 and QA: 5 A (max. current in terminal C: 10 A).

With Discrete I/O Extension Module

SR3B•••B + SR3XT•••B, SR3B•••FU + SR3XT•••FU

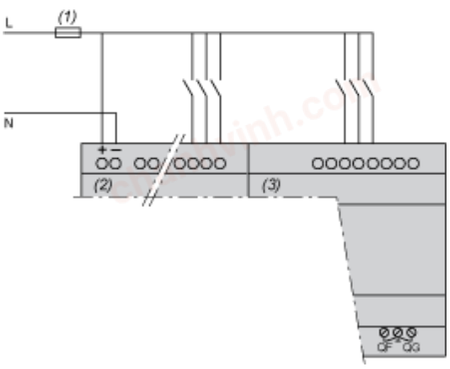

(1) 1 A quick-blow fuse or circuit-breaker.
NOTE: QF and QG: 5 A for SR3XT141••

chanhvinh.com

Product data sheet SR2B201FU

Performance Curves

Compact and Modular Smart Relays

Electrical Durability of Relay Outputs

(in millions of operating cycles, conforming to IEC/EN 60947-5-1)

AC-12 (1)

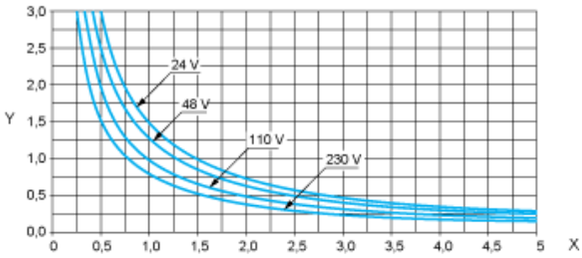

X: Current (A)
Y: Millions of operating cycles
(1) AC-12: switching resistive loads and opto-coupler isolated solid-state loads, cos ≥ 0.9.

AC-14 (1)

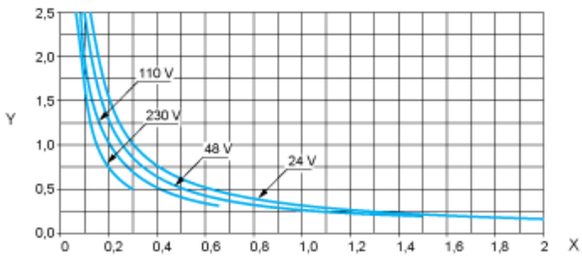

X: Current (A)
Y: Millions of operating cycles
(1) AC-14: switching small electromagnetic loads ≤ 72 VA, make: cos = 0.3, break: cos = 0.3.

AC-15 (1)

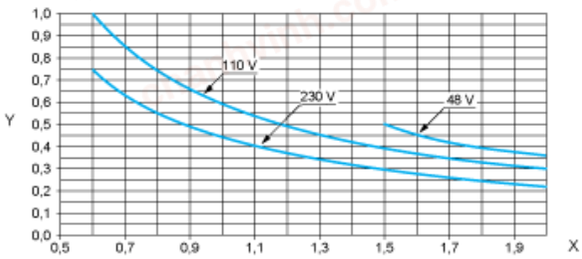

X: Current (A)
Y: Millions of operating cycles
(1) AC-15: switching electromagnetic loads ≥ 72 VA, make: cos = 0.7, break: cos = 0.4.

Life Is On Schneider Electric