chanhvinh.com

Product data sheet
Characteristics

BMXAMI0810H
isolated analog input module X80 - 8 inputs - high speed - severe



Main

Range of product	Modicon X80
Product or component type	Analog input module
Product specific application	For severe environments
Electrical connection	28 ways 1 connector
Isolation between channels	Isolated
Input level	High level
Analogue input number	8
Analogue input type	Current +/- 20 mA Current 0...20 mA Current 4...20 mA Voltage +/- 10 V Voltage +/- 5 V Voltage 0...10 V Voltage 0...5 V Voltage 1...5 V

Complementary

Analog/digital conversion	16 bits
Analogue input resolution	15 bits + sign
Permitted overload on inputs	+/- 30 mA 0...20 mA +/- 30 mA 4...20 mA +/- 30 V +/- 10 V +/- 30 V +/- 5 V +/- 30 V 0...10 V +/- 30 V 0...5 V +/- 30 V 1...5 V +/- 30 mA +/- 20 mA
Input impedance	10 MOhm in voltage mode 250 Ohm + 3.6...50 Ohm internal protective resistor in current mode
Precision of internal conversion resistor	0.1 % - 15 ppm/°C
Type of filter	First order digital filtering
Fast read cycle time	1 ms + 1 ms x number of channels used
Nominal read cycle time	9 ms for 8 channels
Measurement error	0.15 % of full scale +/- 20 mA 25 °C 0.15 % of full scale 0...20 mA 25 °C 0.15 % of full scale 4...20 mA 25 °C 0.075 % of full scale +/- 10 V 25 °C 0.075 % of full scale 0...10 V 25 °C 0.075 % of full scale 0...5 V 25 °C 0.075 % of full scale 1...5 V 25 °C 0.075 % of full scale +/- 5 V 25 °C <= 0.2 % of full scale +/- 10 V - 25...70 °C <= 0.2 % of full scale +/- 5 V - 25...70 °C <= 0.2 % of full scale 0...10 V - 25...70 °C <= 0.2 % of full scale 0...5 V - 25...70 °C <= 0.2 % of full scale 1...5 V - 25...70 °C <= 0.55 % of full scale +/- 20 mA - 25...70 °C <= 0.55 % of full scale 0...20 mA - 25...70 °C <= 0.55 % of full scale 4...20 mA - 25...70 °C

The information provided in this documentation contains general descriptions and/or technical characteristics of the performance of the products contained herein.
This documentation is not intended as a substitute for and is not to be used for determining suitability or reliability of these products for specific user applications.
It is the duty of any such user or integrator to perform the appropriate and complete risk analysis, evaluation and testing of the products with respect to the relevant specific application or use thereof.
Neither Schneider Electric Industries SAS nor any of its affiliates or subsidiaries shall be responsible or liable for misuse of the information contained herein.

chanhvinh.com

Temperature drift	30 ppm/°C +/- 10 V 30 ppm/°C +/- 5 V 30 ppm/°C 0...10 V 30 ppm/°C 0...5 V 30 ppm/°C 1...5 V 50 ppm/°C +/- 20 mA 50 ppm/°C 0...20 mA 50 ppm/°C 4...20 mA
Minimum crosstalk attenuation	80 dB
Common mode rejection	80 dB
Digital value format	- 32768 to + 32767 in maximum user scale +/- 10000 by default
Isolation voltage	300 V DC between channels 1400 V DC between channels and ground 1400 V DC between channels and bus
Measurement resolution	0.36 mV +/- 10 V 0.36 mV 0...10 V 0.36 mV 0...5 V 0.36 mV 1...5 V 0.36 mV +/- 5 V 1.4 µA +/- 20 mA 1.4 µA 0...20 mA 1.4 µA 4...20 mA
Maximum conversion value	+/- 11.4 V +/- 10 V +/- 11.4 V 0...10 V +/- 11.4 V 0...5 V +/- 11.4 V 1...5 V 0...30 mA +/- 20 mA 0...30 mA 0...20 mA 0...30 mA 4...20 mA 0...30 mA +/- 5 V
Operating altitude	0...2000 m 2000...5000 m with derating factor
Status LED	RUN 1 LED Green) 1 LED per channel (green)channel diagnostic ERR 1 LED Red) I/O 1 LED Red)
Net Weight	0.39 lb(US) (0.175 kg)
Power consumption in W	1.06 W 24 V DC typical 1.50 W 24 V DC maximum 0.32 W 3.3 V DC typical 0.48 W 3.3 V DC maximum

Environment

Vibration resistance	3 gn
Shock resistance	30 gn
Ambient air temperature for storage	-40…185 °F (-40…85 °C)
Ambient air temperature for operation	-13…158 °F (-25…70 °C)
Relative humidity	5…95 % 131 °F (55 °C) without condensation
IP degree of protection	IP20
Directives	2014/35/EU - low voltage directive 2014/30/EU - electromagnetic compatibility 2012/19/EU - WEEE directive
Product certifications	CE RCM CSA EAC Merchant Navy UL ATEX IEC-Ex
Standards	EN/IEC 61010-2-201 EN/IEC 61131-2 UL 61010-2-201 CSA C22.2 No 61010-2-201

Environmental characteristic	Gas resistant class Gx Gas resistant class 3C4 Dust resistant class 3S4 Sand resistant class 3S4 Salt resistant level 2 Mold growth resistant class 3B2 Fungal spore resistant class 3B2 Hazardous location
Protective treatment	Conformal coating

Ordering and shipping details

Category	18160 - MODICON M340
Discount Schedule	PC34
GTIN	00785901447474
Nbr. of units in pkg.	1
Package weight(Lbs)	0.38 lb(US) (0.17 kg)
Returnability	Yes
Country of origin	FR

Packing Units

Unit Type of Package 1	PCE
Package 1 Height	2.17 in (5.5 cm)
Package 1 width	4.33 in (11 cm)
Package 1 Length	4.72 in (12 cm)
Unit Type of Package 2	S02
Number of Units in Package 2	15
Package 2 Weight	6.13 lb(US) (2.78 kg)
Package 2 Height	5.91 in (15 cm)
Package 2 width	11.81 in (30 cm)
Package 2 Length	15.75 in (40 cm)

Offer Sustainability

Sustainable offer status	Green Premium product
California proposition 65	WARNING: This product can expose you to chemicals including: Lead and lead compounds, which is known to the State of California to cause cancer and birth defects or other reproductive harm. For more information go to www.P65Warnings.ca.gov
REACh Regulation	REACh Declaration
REACh free of SVHC	Yes
EU RoHS Directive	Pro-active compliance (Product out of EU RoHS legal scope) EU RoHS Declaration
Mercury free	Yes
RoHS exemption information	Yes
China RoHS Regulation	China RoHS Declaration
Environmental Disclosure	Product Environmental Profile
Circularity Profile	End Of Life Information
WEEE	The product must be disposed on European Union markets following specific waste collection and never end up in rubbish bins.

Contractual warranty

Warranty	18 months

chanhvinh.com

Product data sheet
Dimensions Drawings

BMXAMI0810H

Modules Mounted on Racks

Dimensions

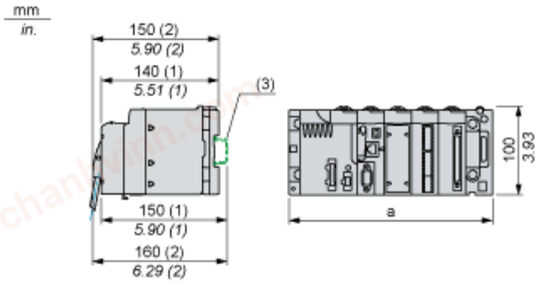

(1) With removable terminal block (cage, screw or spring).
(2) With FCN connector.
(3) On AM1 ED rail: 35 mm wide, 15 mm deep. Only possible with BMXXBP0400/0400H/0600/0600H/0800/0800H rack.

Rack references	a in mm	a in in.
BMXXBP0400 and BMXXBP0400H	242.4	09.54
BMXXBP0600 and BMXXBP0600H	307.6	12.11
BMXXBP0800 and BMXXBP0800H	372.8	14.68
BMXXBP1200 and BMXXBP1200H	503.2	19.81

chanhvinh.com

Product data sheet
Connections and Schema

BMXAMI0810H

Wiring Diagram

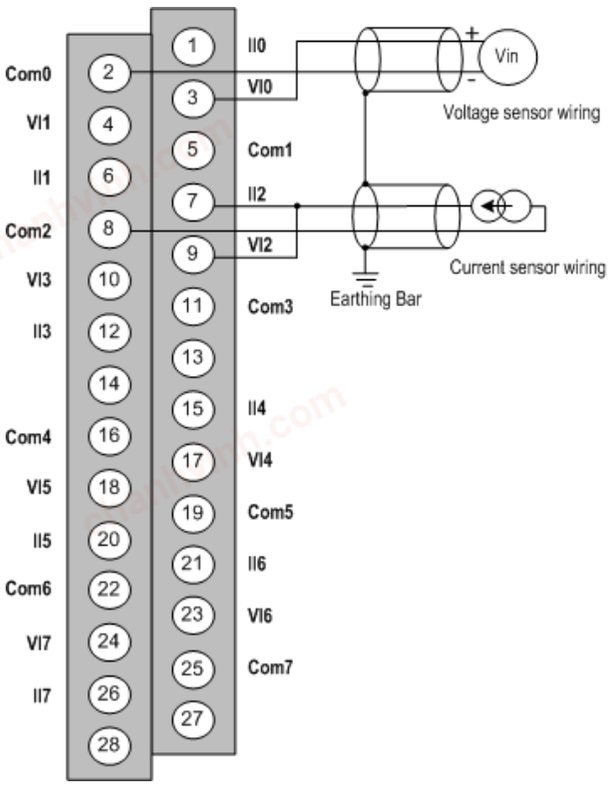

VIx + pole input for channel x
COM x pole input for channel x
IIx current reading resistor + input
Channel voltage sensor
0
Channel 2-wire current sensor
1